Winnetka Village Council
STUDY SESSION
Village Hall
510 Green Bay Road
Tuesday, March 10, 2015
7:00 PM

Emails regarding any agenda item are welcomed. Please email contactcouncil@winnetka.org, and your email will be relayed to the Council. Emails for a Tuesday Council meeting must be received by Monday at 4 p.m. Any email may be subject to disclosure under the Freedom of Information Act.

AGENDA

1) Call to Order

2) 2015 Winnetka Fire Suppression Assessment 2

3) Overlay District Uses 236

4) Public Comment

5) Executive Session

6) Adjournment

NOTICE

All agenda materials are available at villageofwinnetka.org (Government > Council Information > Agenda Packets & Minutes); the Reference Desk at the Winnetka Library; or in the Manager's Office at Village Hall (2nd floor).

Broadcasts of the Village Council meetings are televised on Channel 10 and AT&T Uverse Channel 99 every night at 7 PM**.** Webcasts of the meeting may also be viewed on the Internet via a link on the Village's web site: http://winn-media.com/videos/

The Village of Winnetka, in compliance with the Americans with Disabilities Act, requests that all persons with disabilities who require certain accommodations to allow them to observe and/or participate in this meeting or have questions about the accessibility of the meeting or facilities, contact the Village ADA Coordinator – Megan Pierce, at 510 Green Bay Road, Winnetka, Illinois 60093, 847-716-3543; T.D.D. 847-501-6041.

Agenda Item Executive Summary

Title: Transformer Yard and Generation Plant Fire Protection Assessment

Presenter: Brian Keys, Director of Water & Electric

Agenda Date: 03/10/2015

Consent: ☐ YES ☑ NO

☐ Ordinance
☐ Resolution
☐ Bid Authorization/Award
☑ Policy Direction
☐ Informational Only

Item History:

The Water & Electric Department's fiscal year 2014 budget contained funding for professional services to assess the fire protection of the transformer yard and the generating equipment located at the Electric Plant. At the June 24, 2014 Village Council meeting, both projects were awarded to Strand Associates. The intent of the assessment was to provide an evaluation of the existing facilities, review industry standards, evaluate alternatives, and provide recommendations for each that included estimated construction costs.

Executive Summary:

Copies of the final report entitled, "Transformer Yard and Generation Plant Fire Protection Assessment" have been made available to the Village Council with this report. Representatives from Strand Associates will be in attendance at the March 10, 2015 Village Council Study Session to present an overview of the assessment and their recommendations.

After evaluating the existing facilities, recommendations from the Village's insurance carrier, and various fire protection measures, the consultant is recommending that the Village install a wet fire protection system for the steam turbine bearings on the operating floor and the basement of the Electric Plant. Recommendations for the transformer yard include improved secondary containment, barrier walls, and a deluge fire protection system. The estimated cost to provide fire protection measures to both the Electric Plant generating units and the transformer yard is $1.8 million.

Recommendation:

Consider providing policy direction on a multi-year approach to improve fire protection at the Electric Plant's generating units and transformer yard.

Attachments:

- Agenda Report dated March 7, 2015
- Attachment A: Electric Fund Capital Plan
- Attachment B: Transformer Yard and Generation Plant Fire Protection Assessment Report – Strand Associates

AGENDA REPORT

SUBJECT: **Transformer Yard and Generation Plant Fire Protection Assessment**

PREPARED BY: Brian Keys, Director Water & Electric

REF: June 24, 2014 Village Council Meeting, pp. 29-41

DATE: March 7, 2015

History

The Water & Electric Department's fiscal year 2014 budget contained funding for professional services to assess the fire protection of the transformer yard and the generating equipment located at the Electric Plant. At the June 24, 2014, Village Council meeting, both projects were awarded to Strand Associates. The intent of the assessment was to provide an evaluation of the existing facilities, review industry standards, evaluate alternatives, and provide recommendations for each that included estimated construction costs.

Copies of the final report entitled, "Transformer Yard and Generation Plant Fire Protection Assessment" have been made available to the Village Council with this report. Representatives from Strand Associates will be in attendance at the March 10, 2015 Village Council Study Session to present an overview of the assessment and their recommendations. Following the presentation, staff and the consultant will address questions about the findings and next steps.

Background:

Electric Plant-Generation

The Electric Plant operates and maintains five generating units to support the Village's electric system. The generation fleet consists of three steam turbines and two reciprocating engines that use diesel fuel for the internal combustion process. With the exception of one small suppression system for a lube oil storage tank, the units do not currently contain systems for the detection and suppression of fire. Each of the generators contains combustible liquid and poses a fire risk to the Electric Plant and Water Plant. Beyond protection of the generating assets, located within the same basement area as the generating equipment is the high-lift water pumps used to supply potable water to the distribution system from the Water Plant clearwells.

Transformer Yard
The transformer yard has four mineral oil-filled power transformers, one mineral oil-filled voltage regulator and one metal enclosed capacitor bank located in an outdoor substation area of the Plant Load Center. These power transformers are generator step-up transformers that connect the 4,160 volt generators to 12,470 volt power system. Power generated at the Electric Plant is generated at 4,160 volts. The majority of the electric distribution circuits utilize 12,470 volts. During the periods when the plant is not generating, the transformers step-down the voltage to provide 4,160 volt electric service the station power transformers that serve the Water and Electric Plants. The existing facility does not include, nor was there provisions made for, fire protection or fire suppression of the power transformers.

Discussion:
The existing configuration of the transformer yard and generating units contain the potential for a single catastrophic event to involve additional pieces of equipment. Depending on the location of the fire and the extent to which it spread, this could result in a disruption of potable water service (until activation of the emergency interconnects), extended outages of four 4kV electric distribution circuits and the loss of generating capability.

After evaluating the existing facilities, recommendations from the Village's insurance carrier, and various fire protection measures, Strand is recommending that the Village install a wet fire protection system for the steam turbine bearings on the operating floor and the basement of the Electric Plant. Recommendations for the transformer yard include improved secondary containment, barrier walls, and a deluge fire protection system.

The estimated cost to provide fire protection measures to both the Electric Plant generating units and the transformer yard is $1.8 million. During development of the FY 2015 budget, the consultant's recommendations and cost projections were still being finalized. In order to insure that some funding was allocated for improvements to fire protection, staff budgeted $540K in 2015 and $1.2M in 2017, and is reflected in the Electric Fund Capital Plan as Attachment A.

Recommendation:
Consider providing policy direction on a multi-year approach to improve fire protection at the Electric Plant's generating units and transformer yard.

Attachments:
Attachment A: Electric Fund Capital Plan
Attachment B: Transformer Yard and Generation Plant Fire Protection Assessment Report – Strand Associates

Village of Winnetka
Electric and Water Fund Capital Financing
(In Thousands of Dollars)

2014.10.03

Electric Fund	2014 Estimated	2015	2016	2017	2018	2019	Total (Est. - 19)
1/1 Unrestricted Net Assets @	5,932	5,370	3,847	2,481	3,050	536	n/a
Sources (Uses) of Cash							
* Contribution from Operations	(415)	(671)	(671)	(671)	(671)	(671)	(3,770)
Depreciation	1,600	1,600	1,600	1,600	1,600	1,600	9,600
### Loan from General Fund				3,000			
Loan Repayment					(300)	(300)	(300)
Cash Generated	1,185	929	929	3,929	629	629	5,830
Less: Capital Projects	*(1,747)*	*(2,452)*	*(2,295)*	*(3,361)*	*(3,143)*	*(2,600)*	*(15,598)*
Net Annual Source (Use) of Cash	(562)	(1,523)	(1,366)	568	(2,514)	(1,971)	(9,768)
Water Fund							
1/1 Unrestricted Net Assets @	1,265	1,548	1,566	1,817	1,815	1,393	n/a
Sources (Uses) of Cash							
* Contribution from Operations	383	445	445	445	445	445	2,608
## Revenue Increases							-
Depreciation	440	440	440	440	440	440	2,640
Cash Generated	823	885	885	885	885	885	5,248
Less: Capital Projects	*(540)*	*(867)*	*(634)*	*(887)*	*(1,307)*	*(881)*	*(5,116)*
Net Annual Source (Use) of Cash	283	18	251	(2)	(422)	4	132

@ Cash and investment balance from page 11 of 12/31/2013 CAFR used
* Based on net income history, excludes interest income.
# Principal and interest based on 3% simple interest on outstanding balance.
Water assumes a 2% increase 1/1/2015 for incorporated, 4% unincorporated.
Loan from General Fund to be repaid over a ten (10) year period at 0% interest.

Capital Plan (in thousands of dollars)

	Electric Fund	#	Budget 2014	Estm. 2014	***----------Projected---------- 2015	2016	2017	2018	2019	(Est. - 19)
		E								
Transportation										
Yards	67% of #64 Service Truck (2000)	1	$ 101	$ 95						$ 95
Yards	50% of #60 Dump Truck (1995)	2					$ 41			$ 41
Plant	50% of #84 Pick up / Snow Plow (2003)	3				$ 20				$ 20
Yards	Replace Line Truck #55 (2000)	4						$ 220		$ 220
Yards	67% of Line Truck #57 (1986)	5			$ 157					$ 157
Sub-Total			$ 101	$ 95	$ 157	$ 20	$ 41	$ 220	$ -	$ 533
Electric Plant										
Plant	Fire Protection Generator/Turbine & Diesels	6					$ 528			$ 528
Sub-Total			$ -	$ -	$ -	$ -	$ 528	$ -	$ -	$ 528
Substations										
Northfield Sub.	New Transformer	7						*$ 837*	*$ 623*	$ 1,460
Northfield Sub.	ComEd Interconnection	8						$ 140		$ 140
Northfield Sub.	New Switchgear	9	*$ 456*			$ 456				$ 456
Plant Load Center	Fire Protection Transformer Yard	10			*$ 540*		$ 676			$ 1,216
Plant Load Center	Fire Protection - Building	11					$ 250			$ 250
Sub-Total			$ 456	$ -	$ 540	$ 456	$ 926	$ 977	$ 623	$ 3,522
Distribution										
New Business	Cable Pulling & Directional Boring	12	*$ 450*	*$ 420*	*$ 420*	*$ 433*	*$ 446*	*$ 459*	*$ 472*	$ 2,650
System & New Bus.	Conductors & Cable Pulling	13	*$ 546*	*$ 347*	*$ 450*	*$ 479*	*$ 496*	*$ 546*	*$ 546*	$ 2,864
System & New Bus.	Cable Devices	14	*$ 69*	*$ 59*	*$ 59*	*$ 61*	*$ 63*	*$ 64*	*$ 66*	$ 372
System	System Upgrades - Conduit	15	$ 120	$ 120	$ 120	$ 124	$ 124	$ 124	$ 124	$ 736
System & New Bus.	Transformers & Devices	16	$ 124	$ 120	*$ 120*	*$ 124*	*$ 127*	*$ 131*	*$ 135*	$ 757
System & New Bus.	Allocated Employee Salaries	17	*$ 586*	*$ 586*	*$ 586*	*$ 598*	*$ 610*	*$ 622*	*$ 634*	$ 4,222
Sub-Total			$ 1,895	$ 1,652	$ 1,755	$ 1,819	$ 1,866	$ 1,946	$ 1,977	$ 11,601
	Electric Capital		$ 2,452	$ 1,747	$ 2,452	$ 2,295	$ 3,361	$ 3,143	$ 2,600	$ 16,184

Professional

Engineering

Services

Transformer Yard and Generation Plant Fire Protection Assessment

Report

Village of

Winnetka, IL

March 2015

STRAND ASSOCIATES®

Strand Associates, Inc.®
910 West Wingra Drive
Madison, WI 53715
(P) 608-251-4843
(F) 608-251-8655

March 4, 2015

Mr. Brian Keys
Village of Winnetka
1390 Willow Road
Winnetka, IL 60093

Re: Transformer Yard and Generation Plant Fire Protection Assessment

Dear Brian,

Enclosed are 20 copies of the final Transformer Yard and Generation Plant Fire Protection Assessment.

Please call with questions.

Sincerely,

STRAND ASSOCIATES, INC.®

Nathan L. Brandt, PE

Enclosure: Report

NLB:plh\R:\MAD\Documents\Reports\Archive\2015\Winnetka, IL\XFER&FPA.1619.008.btm.jan\Report_1 Cover Letter.docx\030315

Report for
Village of Winnetka, Illinois

Transformer Yard and Generation Plant Fire Protection Assessment

LICENSED PROFESSIONAL ENGINEER
NATHANIEL LEE BRANDT
062-065921
STATE OF ILLINOIS

3/3/2015

Prepared by:

STRAND ASSOCIATES, INC.®
910 West Wingra Drive
Madison, WI 53715
www.strand.com

March 2015

STRAND ASSOCIATES®

TABLE OF CONTENTS

Page No.
or Following

EXECUTIVE SUMMARY

SECTION 1–INTRODUCTION AND BACKGROUND

1.01 Purpose and Scope 1-1
1.02 Location of Assessment 1-2
1.03 Related Report and Information 1-3
1.04 Codes, Standards, and References 1-3
1.05 Abbreviations and Definitions 1-4

SECTION 2–EVALUATION OF EXISTING FACILITIES

2.01 Generation Plant 2-1
2.02 Transformer Yard 2-3

SECTION 3–FIRE PROTECTION DESIGN CONSIDERATIONS

3.01 Generation Plant 3-1
3.02 Transformer Yard 3-3
3.03 Codes, Standards, and References Summary 3-6

SECTION 4–EVALUATION OF ALTERNATIVES

4.01 Generation Plant 4-1
4.02 Transformer Yard 4-4

SECTION 5–FISCAL IMPACT ANALYSIS

5.01 Project Cost and Funding 5-1
5.02 Construction Cost Opinion Options 5-1

SECTION 6–RECOMMENDATIONS

6.01 Project Recommendations 6-1
6.02 Phasing of Construction 6-2
6.03 Project Costs 6-3
6.04 Project Implementation Schedule 6-4

TABLE OF CONTENTS Continued

Page No.
or Following

TABLES

2.01-1	Generation Equipment Combustible Liquid Storage Volume	2-2
2.02-1	Transformer Yard Equipment Combustible Liquid Storage	2-3
2.02-2	Mineral Oil-Insulated Equipment Separation Distances	2-4
4.01-1	Nonmonetary Alternatives	4-3
4.02-1	Transformer Yard Equipment Information	4-4
4.02-2	Equipment Upgrade of Modification Nonmonetary Alternatives	4-5
4.02-3	Fire Protection Nonmonetary Alternatives	4-7
4.02-4	Containment Nonmonetary Alternatives	4-10
5.02-1	Option 1 Retrofilling of Equipment	5-1
5.02-2	Option 2 Equipment Replacement	5-2
5.02-3	Option 3 Wet Fire Protection System	5-2
5.02-4	Option 4 Compressed Air Foam System	5-3
6.03-1	Phase 1 Opinion of Probable Cost	6-3
6.03-2	Phase 2 Opinion of Probable Cost	6-3
6.03-3	Phase 3 Opinion of Probable Cost	6-3
6.03-4	Phase 4 Opinion of Probable Cost	6-4
6.04-1	Anticipated Implementation Schedule	6-4

FIGURES

1.01-1	FM Global Equipment Losses from 2008-2013 (Percent of Total Cost)	1-1
1.02-1	Generation Plant and Transformer Yard	1-3
2.01-1	Steam Turbine Generators Nos. 7 and 6 (Left to Right)	2-1
2.01-2	Diesel Generators No. 8 and 9 and Steam Turbine No. 7 (Left to Right)	2-1
2.01-3	Sprinkler Protection of Steam Turbine Generator No. 4 Lube Oil Filter (Lube Oil Tank Above Not Shown)	2-2
2.02-1	Transformer Yard	2-3
2.02-2	Existing Bollard Protection	2-4
2.02-3	Existing Containment Structure	2-5
2.02-4	Existing Sump and Pump	2-5
4.01-1	Potential Fire Pump Location	4-2
4.02-1	Transformer Yard Spatial Separation	4-5
4.02-2	Transformer Nitrogen Cylinders	4-8
4.02-3	Secondary Containment Extension	4-9
4.02-4	High Pressure Gas Main Location	4-11
4.02-5	Two Electric Manholes in Secondary Containment	4-11
4.02-6	Electric Manhole South of Secondary Containment	4-12
4.02-7	Electric Manhole North of Secondary Containment	4-12

APPENDICES

APPENDIX A–INSURANCE CARRIER SURVEY REPORT
APPENDIX B–SYSTEM INFORMATION AND DATA
APPENDIX C–OPINION OF PROBABLE CONSTRUCTION COST
APPENDIX D–FIRE PUMP ROOM LAYOUT DRAWINGS
APPENDIX E–CAFS EQUIPMENT INSTALLATION LOCATION
APPENDIX F–GENERATION PLANT LAYOUT DRAWINGS

EXECUTIVE SUMMARY

INTRODUCTION

The Transformer Yard and Generation Plant Fire Protection Assessment is intended to provide the Village of Winnetka (Village) an overview of existing conditions. It is also intended to address the Village's concerns regarding critical infrastructure protection at the water and electric plants. Finally, the assessment is intended to address risk mitigation recommendations brought forth by the Village's property insurer. This assessment evaluates existing facilities, reviews applicable industry design standards, and presents an evaluation of alternatives, with recommendations, to address staff and property insurer concerns.

EVALUATION OF EXISTING FACILITIES

A. Generation Plant

The area of the generation plant that was evaluated consists of an operating floor and a basement. The operating floor contains three steam turbine generators (Nos. 4, 6, and 7). The steam turbine generators require a combustible lubricating oil which is stored in a 300- or 400-gallon tank located in the ceiling space of the basement. Other ancillary components of the steam turbine generators are also located in the basement. The lubricating oil is routed from the storage tank through piping to filters and to the operating floor where the steam turbine generator is located. Currently, there is very limited fire protection of the lube oil storage tanks associated with the steam turbine generators.

The basement also contains two diesel engine generators (Nos. 8 and 9). These generators require diesel fuel which is stored in a 300-gallon tank located in the basement adjacent to each of the generators.

The water treatment plant high lift pumps are located in the basement and deliver water from the clearwells to the distribution system serving the Village of Winnetka, City of Northfield and select unincorporated areas in the surrounding communities.

Both the lubricating oil and the diesel fuel are considered combustible liquids and pose a fire risk to the power generation and water treatment facilities. A fire involving one piece of equipment within the power generation facility could impact the surrounding equipment noted above as well as the entire power generation and water treatment facilities because of the lack of fire protection currently installed. The ability to provide potable water to the Village customers could be significantly impacted if a fire event were to occur.

B. Transformer Yard

The transformer yard is a 60-foot by 44-foot fenced-in area located to the north of the water treatment facility and along the south side of the public access road leading to the adjacent beach. Wooden bollards are located at the northwest corner of the transformer yard along the public access road for limited protection.

There are four transformers (Nos. 1, 2, 3, and spare), a voltage regulator, and a capacitor bank located within the fence line. This equipment allows power from the distribution grid

(Commonwealth Edison) to serve Winnetka distribution circuits and the power generation and water treatment facilities when the power plant is not generating electricity. These transformers also allow the power plant to distribute power to the distribution grid when generating power in conjunction or in lieu of Commonwealth Edison. A failure of this equipment would cause a momentary loss of the ability to provide domestic and fire protection water to the Village and its customers until the diesel generators can be manually placed online. The transformers are currently installed approximately 5 feet apart in the east-west direction and approximately 12 feet apart in the north-south direction.

The voltage regulator and four transformers contain combustible insulating oil. Various volumes of oil are contained in this equipment ranging from 506–4,220 gallons. This insulating oil presents a fire risk as well as an explosion risk which would affect surrounding equipment that may not have been involved in the initial fire or explosion.

The transformer yard is currently provided with a concrete secondary containment structure surrounding the equipment that is sized for the largest transformer insulating oil volume. Any captured liquid in the secondary containment drains to a small sump located outside the footprint of the transformer yard. A manually operated sump pump is located in the sump and discharges rainwater to the grassy area west of the transformer yard. Any insulating oil that is captured due to a leak or rupture would be disposed of appropriately. The secondary containment structure does not appear to meet the requirements of the Code of Federal Regulations 40 CFR 112–Oil Pollution Prevention, or as it is commonly referred to as a Spill Prevention, Countermeasures, and Control (SPCC) plan, in regards to liquid storage volume. It is important to note that existing facilities are not grandfathered from the requirements.

EVALUATION OF ALTERNATIVES

A review of existing codes, standards, and references was completed to determine the requirements. A detailed description of these documents and their requirements are included in this assessment. Based on this review, various options were evaluated to meet the Village's concerns as well as the recommendations of the Insurance Carrier Survey Report. Detailed descriptions of the various alternatives are included in the assessment.

RECOMMENDATIONS

A. Generation Plant

Based on the evaluation of monetary and nonmonetary factors, providing a wet fire protection system with coverage for the steam turbine bearings on the operating floor and the entire basement is recommended. Because of the water supply being considered unreliable based on National Fire Protection Association adopted codes as well as input from the Local Authority Having Jurisdiction, a fire pump is required.

A tangible benefit of the fire pump is that it will also allow for a future expansion of the fire protection system to cover the entire power generation and water treatment facilities in the future if needed.

B. Transformer Yard

Considering the monetary and nonmonetary factors, providing a deluge fire protection system for equipment coverage, expanding the secondary containment structure to meet the SPCC requirements, installing blast and barrier walls, and modifying electric manholes are recommended.

The recommendation above is predicated on a fire pump being provided as part of the generation plant recommendations.

FISCAL IMPACT ANALYSIS AND PROJECT IMPLEMENTATION

The opinion of probable construction cost for both the generation plant and transformer yard is shown in Table 5.02-3 Option 3 Wet Fire Protection System. The opinion of total project cost, including technical services and contingencies, is approximately $1.8 million.

A proposed phasing schedule is discussed in Section 6.02 Phasing of Construction in order to spread the total project cost over four Village of Winnetka fiscal years.

Phase 1 would focus on the transformer yard and include modifying the secondary containment structure, installing blast walls, and modifying the electric manholes for a total opinion of project cost of $650,000.

Phase 2 would include installing the fire pump room and all associated electrical construction for a total opinion of project cost of $555,000.

Phase 3 would include installing the fire pump and the fire protection systems in the generation plant and the transformer yard for a total opinion of project cost of $472,000.

Phase 4 would include installing the barrier wall along the public access road for a total opinion of project cost of $103,000.

SECTION 1
INTRODUCTION AND BACKGROUND

In February 2014, the Village of Winnetka (Village) issued two requests for proposals requesting assistance in assessing the existing transformer yard and generation plant for fire protection needs. Those needs included determining the need for suppression, detection, separation, and containment of combustible liquids stored within the transformer, turbine, or generator equipment with respect to insurance carrier requirements and industry standards. This report combines those two separate projects into a single document and describes the location, purpose, scope, and limits of the assessment.

1.01 PURPOSE AND SCOPE

The Village operates a 31,500-kilowatt electric generation plant and a 16 million gallon per day (mgd) water treatment plant to serve the Village and a portion of the surrounding community. The generation plant is operated on an as-needed basis as determined by the Illinois Municipal Electric Agency (IMEA). Equipment is exercised regularly to verify operation and to maintain operator knowledge and capabilities. The water treatment plant is fully functional and supplies potable water to the Village of Winnetka, the City of Northfield, and select unincorporated areas in the surrounding communities.

This assessment was conducted to address concerns regarding critical infrastructure related to the water and electric utility and to develop a plan to meet insurance carrier recommendations for protection of critical infrastructure within the generation plant and in the transformer yard adjacent to the water treatment plant. Currently, there is a limited area fire protection system within the generation plant and no fire protection in the transformer yard. The water treatment plant also has a limited area fire protection system as well but is beyond the scope of this assessment.

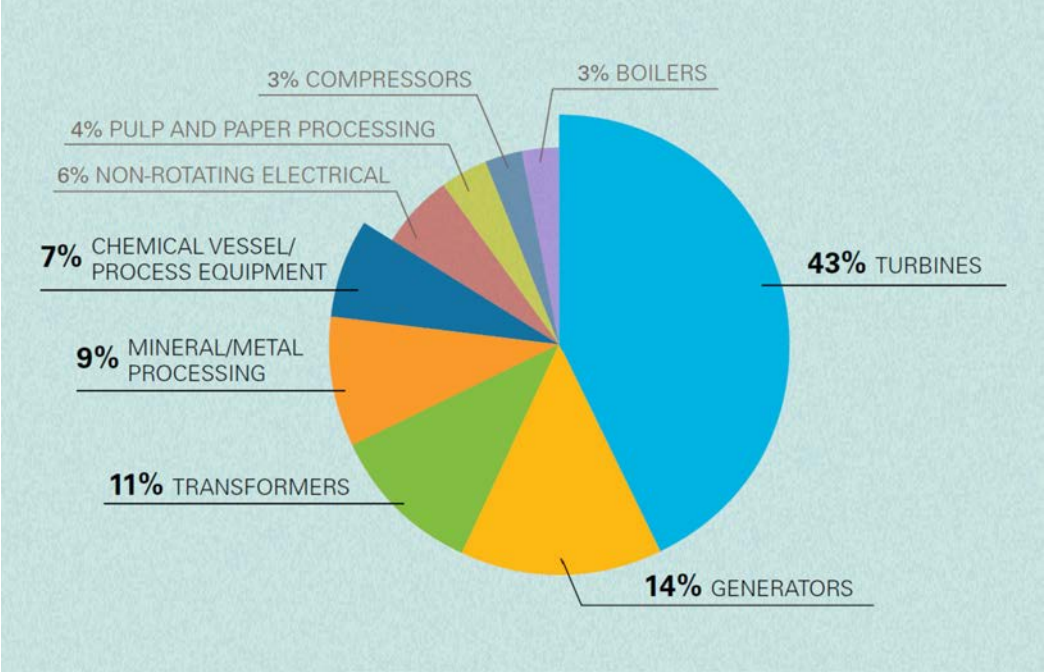

FM Global Reason Magazine, Issue 2, 2014

Figure 1.01-1 FM Global Equipment Fire Losses from 2008-2013 (Percent of Total Cost)

To put the potential loss of either the generation equipment or transformer yard in perspective, we have included Figure 1.01-1. This figure includes the 384 equipment fire losses between 2008 and 2013 for Factory Mutual (FM) Global. Each loss represented amounted to more than one million dollars. Turbines and transformers represented the number one and number three FM Global client fire losses and amounted to 431 and 339 million dollar gross losses, respectively. Although these events may be considered infrequent and the above information is from a single insurance carrier, we believe it demonstrates the significance of the potential loss and brings the issues of system reliability and integrity into consideration.

This assessment presents an evaluation of the options available to alleviate operating risk, provide critical infrastructure protection, and meet the insurance carrier recommendations and common industry standards. A specific plan for critical infrastructure fire protection is recommended and supported by an evaluation of monetary costs, environmental impacts, and other nonmonetary considerations.

It is beyond the scope of this document to provide final design details for implementation of recommendations. The scope of this document is to review insurance carrier recommendations and industry standards and to prepare budgetary costs for options to satisfy these recommendations.

1.02 LOCATION OF ASSESSMENT

The generation plant and the transformer yard are located within Cook County and within the Village of Winnetka, Illinois. The facility is located on the shore of Lake Michigan at 725-735 Tower Road, Winnetka, IL 60093.

There are two areas included in the assessment: (1) generation plant and (2) transformer yard. The location within the generation plant includes areas on the operating floor and in the basement adjacent to three steam turbine and two diesel generators and their ancillary components and fuel and oil storage tanks. The transformer yard is located to the north of the water treatment plant and adjacent to the public access road that leads to the public beach north and east of the facility. The transformer yard is enclosed by a chain link fence and is protected from vehicle traffic with wooden bollards located outside the footprint of the fence.

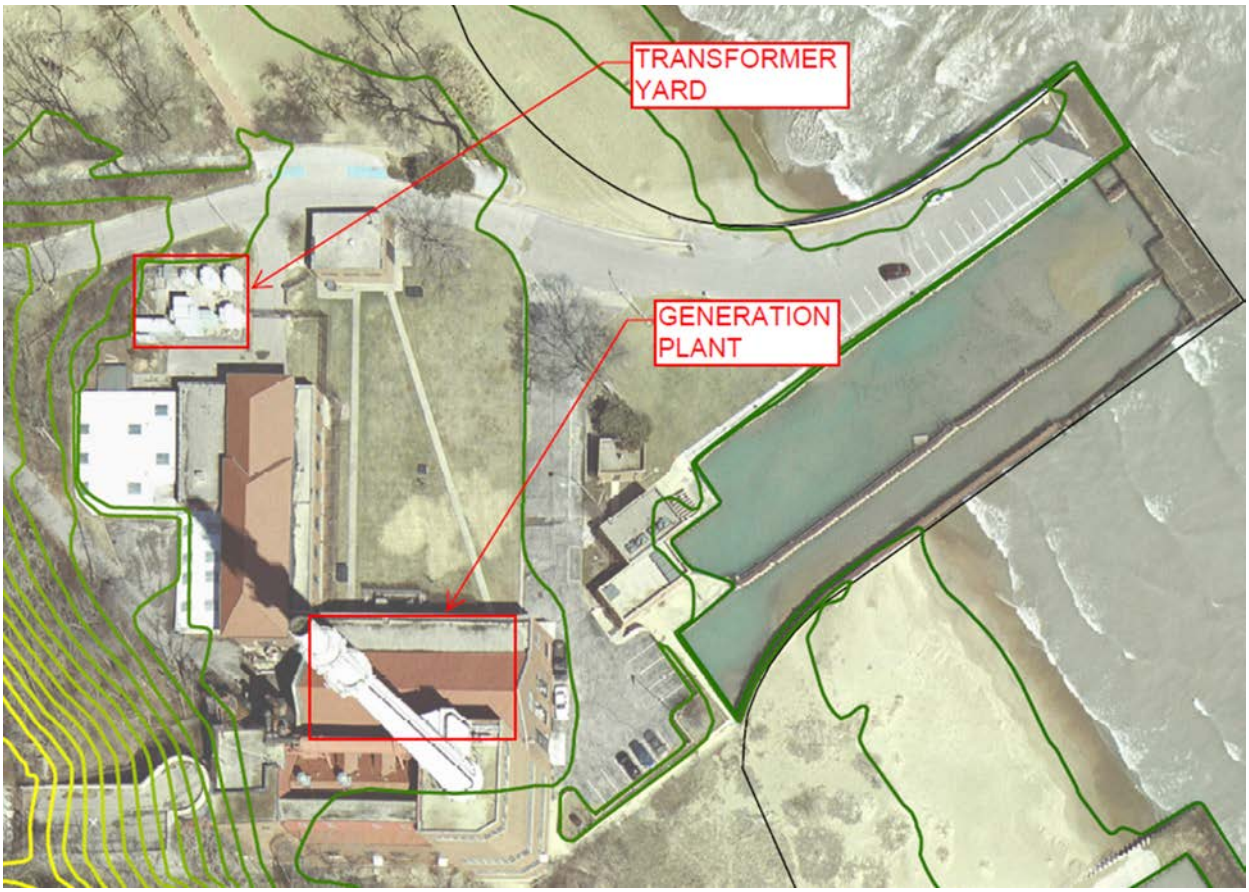

Figure 1.02-1 Generation Plant and Transformer Yard

1.03 RELATED REPORT AND INFORMATION

The following report and information were used in the preparation of this assessment for background information, existing installation details, and other information as required.

1. *July 24, 2013 Survey Report, Assessment and Recommendations for the Village of Winnetka Water and Electric Department*, Starr Technical Risks Agency, Inc.

2. *Record Drawings, Various Years*, prepared by various engineering firms.

1.04 CODES, STANDARDS, AND REFERENCES

The following codes, standards, and references are used within this report.

Building Code:	2009 International Building Code (IBC)
Fire Code:	2009 International Fire Code (IFC)

Plumbing Code:	2004 State of Illinois Plumbing Code
Electric Code:	2008 National Electric Code
Code of Federal Regulations (CFR):	40 CFR 110–Discharge of Oil 40 CFR 112–Oil Pollution Prevention
National Fire Protection (NFPA):	850–Recommended Practice for Fire Protection for Electric Generating Plants and High Voltage Direct Current Converter Stations 750–Standard on Water Mist Fire Protection Systems 15–Standard for Water Spray Fixed Systems for Fire Protection 16–Standard for the Installation of Foam-Water Sprinkler and Foam-Water Spray Systems
Institute of Electrical and Electronics Engineers (IEEE)	979–IEEE Guide for Substation Fire Protection 980–IEEE Guide for Containment and Control of Oil Spills in Substations
Electric Power and Research Institute (EPRI)	Turbine Generator Fire Protection by Sprinkler System
Insurance Carrier:	Starr Technical Risks Agency, Inc. 2013 Survey Report

1.05 ABBREVIATIONS AND DEFINITIONS

CAFS	compressed air foam system
CFR	Code of Federal Regulations
CO_2	carbon dioxide
CY	cubic yards
DNR	Department of Natural Resources
EPRI	Electric Power and Research Institute
FM	Factory Mutual
ft	feet
ft^2	square feet
gpm	gallons per minute
gpm/ft^2	gallons per minute per square foot
IBC	International Building Code
IFC	International Fire Code
IEEE	Institute of Electrical and Electronics Engineers
IMEA	Illinois Municipal Electric Agency
EPRI	Electrical Power Research Institute
in	inch
MW	megawatt

NFPA	National Fire Protection Association
OPCC	Opinion of Probable Construction Cost
PCB	polychlorinated biphenyl
ppm	parts per million
SPCC	Spill Prevention, Control, and Countermeasure
sq ft	square foot or feet

SECTION 2
EVALUATION OF EXISTING FACILITIES

This section describes the existing generation equipment and fire protection systems at the generation plant and the transformer yard. Although the generation plant also has several utility boilers that make up a portion of the plant, those areas were not included in the discussion of existing conditions.

2.01 GENERATION PLANT

The overall building complex appears to be a culmination of several additions, expansions and remodels. The original building construction dates to 1899. The generation plant itself is divided into two portions with a wall separating the boiler area from the turbine area. The wall between the two areas may be a fire barrier separating the two structures, but determining the rating of the wall is beyond the scope of this report.

The building generally appears to be of Type IIIB construction as defined by the International Building Code. This type of construction is also known as unprotected combustible construction or ordinary construction. There is typically no fire resistance rating for the structural frame, floors, ceilings, or roof associated with this construction with the exception of the exterior walls, which code typically requires to be 2-hour rated wall construction. However, the fire rating of the exterior walls was not determined as part of this report. The building construction is an important consideration when understanding the fire risk associated with using and storing flammable or combustible materials.

The turbine area of the generation plant consists of three floors: (1) an operating floor, (2) a basement, and (3) employee facilities on the second floor. Three steam turbine generators [Nos. 6 and 7 (Figure 2.01-1) and No. 4 (Figure 2.01-2)] are located on the operating floor. Each turbine has a capacity of 9.0 megawatt (MW), 6.0 MW, and 12.0 MW, respectively. Some of the ancillary components, such as the lube oil storage tanks, are located below the turbines in the basement.

Two 2.5 MW (each) diesel generators [Nos. 8 and 9 (Figure 2.01-2)] are located in the basement along with their ancillary components, including diesel storage day tanks.

Figure 2.01-1 Steam Turbine Generators Nos. 7 and 6 (Left to Right)

Figure 2.01-2 Diesel Generators Nos. 9 and 8 and Steam Turbine Generator Nos. 4 (Left to Right)

Various unrelated pumping equipment is located within the basement adjacent to the generators including the high service lift pumps that supply potable water to the community. The proximity of this pumping equipment to the turbine and generator equipment puts the pumping equipment at risk of being damaged or destroyed during a turbine or generator fire. The ability of the water utility to provide potable water to water utility customers is at risk as well.

The turbine area does have some fire protection systems installed currently. A limited area fire protection system is installed to protect some components associated with the steam turbine generator lube oil tanks (Figure 2.01-3). The system provides limited protection of the lube oil storage tank installed in the ceiling space of the basement as well as protection of the lube oil piping to and from the oil filter located below the tank on the basement floor. The balance of the generation plant is unprotected in the vicinity of the generators and their ancillary components.

Figure 2.01-3 Sprinkler Protection of Steam Turbine Generator No. 7 Lube Oil Filter (Lube Oil Tank and Sprinkler Protection Above Not Shown)

Each generator contains combustible liquid and poses a fire risk to the generation plant and water treatment plant pumping equipment. Table 2.01-1 lists the equipment, associated combustible liquid and the volume stored at each piece of equipment. The volume noted in the table is the storage tank volume and does not take into consideration additional liquid located within associated piping or components internal to the equipment.

Generator Number	Type	Combustible Liquid	Tank Location	Volume (gallons)
4	Steam Turbine	Lube Oil	Basement	400
6	Steam Turbine	Lube Oil	Basement	400
7	Steam Turbine	Lube Oil	Basement	300
8	Diesel	Diesel Fuel	Basement	300
9	Diesel	Diesel Fuel	Basement	300

Table 2.01-1 Generation Equipment Combustible Liquid Storage Volume

Each of the combustible liquids can be further defined as either a Class II or Class IIIB combustible liquid. Diesel fuel has a flash point of greater than 100°F, but less than 140°F, which makes it a Class II combustible liquid. Lube oil has a flash point of greater than 200°F making it a Class IIIB combustible liquid. The flash point is the minimum temperature at which a liquid gives off vapor in sufficient concentration to form an ignitable mixture and is an indication of susceptibility to ignition. Current building codes typically limit the storage amount and building construction types used to store these materials. For instance, the existing building would be permitted to store only 120 gallons of diesel fuel

under the 2009 International Building Code adopted in Winnetka. The building currently stores 600 gallons of diesel fuel in day tanks.

See Appendix F–Generation Plant Layout Drawings for equipment locations.

2.02 TRANSFORMER YARD

The transformer yard is a 60-foot by 44-foot fenced-in area located to the north of the water treatment plant along a public access road serving the adjacent public beach (Figure 2.02-1). Within the fencing, there are four generator step-up transformers (Nos. 1, 2, 3, and spare), one capacitor bank, and one voltage regulator. The purpose of this equipment is to connect medium-voltage electric generators within the power generation plant to the high-voltage power distribution system serving the surrounding community. Power from the distribution system feeds the electric generation and water utility building through this equipment as well. The area is not currently provided with a fire protection or fire alarm system.

Figure 2.02-1 Transformer Yard

The equipment within this area is important because it represents the location where the Village generation facilities and one of three tie lines from Commonwealth Edison are in the same vicinity. Although there are other feeds that can potentially distribute electricity throughout the municipal distribution system, a failure of this system would severely affect the power and water treatment plants. A failure of this equipment would cause a momentary loss of the ability to provide domestic and fire protection water to the Village and its customers until the diesel generators are started and have been placed online. Depending on which equipment was damaged, the Village's ability to use generating equipment for distribution system or IMEA dispatched requests would be affected.

The four transformers and voltage regulator contain combustible insulating oil and could pose a fire risk to each other if one piece of equipment were to be involved in a fire event. Table 2.02-1 lists the equipment, associated combustible liquid, and the volume stored at each piece of equipment. Generally, the insulating oil within the transformer is a Class IIIB combustible liquid.

Equipment Number	Equipment Manufacturer	Serial Number	Combustible Liquid	Volume (gallons)	PCB Content [parts per million (ppm)]
Transformer No. 1	General Electric	G859833	Insulating Oil	1,380	3
Transformer No. 2	General Electric	G859832A	Insulating Oil	1,080	3
Transformer No. 3 (and LTC)	Magnetek	A2183T	Insulating Oil	4,220	None Detected
Spare Transformer	General Electric	G859832B	Insulating Oil	1,080	3
Voltage Regulator	General Electric	J331024	Insulating Oil	506	None Detected

Table 2.02-1 Transformer Yard Equipment Combustible Liquid Storage

The existing transformer area currently does not meet the suggested separation requirements of the *IEEE Guide for Substation Fire Protection*, IEEE Standard 979-2012. Table 1 of that document indicates the separation distance of individual pieces of mineral oil-insulated equipment and is further summarized in Table 2.02-2.

Mineral Oil Volume (gallons)	Separation Distance (feet)
<500	a
500 to 5000	25
>5000	50

a. Determining the type of physical separation to be used for mineral oil volumes less than 500 gallons should be based on review of special considerations listed in IEEE Standard 979-2012.

Table 2.02-2 Mineral Oil-Insulated Equipment Separation Distances

Figure 2.02-2 Existing Bollard Protection

The separation distance between transformers at the existing facility is approximately 5 feet in the east-west direction and 12 feet in the north-south direction, which is less than the IEEE prescribed distance. Although the IEEE Standard 979-2012 is not a prescriptive code, it is generally used for new construction but was not in existence at the time of the transformer yard construction. Separation distance is an important consideration not only for fire exposure to adjacent equipment but also when considering an explosion. Installing equipment meeting these separation distances would require approximately 60 feet in the north-south direction and 90 feet in the east-west direction, not including the potential modifications required for expanded secondary containment.

The public access road adjacent to the transformer yard is at a steep grade from the Village at the top of the hill down to the shore of Lake Michigan. This access road is used by the public to gain access to the local public beach north of the facility. Wooden bollards (Figure 2.02-2) have been installed at the northwest corner of the transformer yard to protect the equipment from vehicle accidents because of carelessness or winter driving conditions.

The CFR Title 40, Part 112 requires that this facility prepare and follow a Spill Prevention, Control, and Countermeasure (SPCC) plan. This plan indicates the existing containment surrounding the equipment is sized for the quantity of oil in the largest transformer. All the equipment in the containment area is installed on concrete equipment pads to provide approximately 4 inches of containment above the current surrounding grade. A small sump is located just outside the southeast corner of the containment curb with a manually controlled pump. Operators check the sump weekly for oil. Operators also check the sump after all rain events to discharge any collected rainwater to the local grade west of the containment area.

It does not appear that the existing containment facilities meet the intentions of 40 CFR 112. The existing containment facilities provide sufficient volume for catastrophic failure of the single largest

transformer. However, the existing containment does not provide capacity for a precipitation event, which is required by Code. Typically, the 25-year, 24-hour rain event is considered when sizing secondary containment. Furthermore, it was observed during our site visit that stormwater had overtopped the existing containment area because of sediment carryover and erosion in and around the containment area.

Figure 2.02-3 Existing Containment Structure

Figure 2.02-4 Existing Sump and Pump

SECTION 3
FIRE PROTECTION DESIGN CONSIDERATIONS

This section describes the practices and recommendations in various industry standards for protecting the generation plant and the transformer yard.

3.01 GENERATION PLANT

As noted previously, there is a limited area fire protection system for the lube oil storage tanks and one of the lube oil filter systems associated with steam turbine generators. The filters and piping associated with the other generators and their ancillary components are unprotected. Various industry standards recommend providing fire protection above and in the vicinity of the generators and their ancillary equipment.

A. Starr Technical Risks Agency (Insurance Carrier)

The insurance carrier conducted a facility survey in 2013 after reacquiring the generation plant from another insurance carrier. The survey listed recommendations in regard to fire protection within the generation plant. These recommendations include:

1. Providing protection of combustible oils including the following:

    a. Over and 20 feet (ft) beyond all permanent tanks of lubricating oil in all directions.

    b. Over and 30 feet beyond oil reservoirs for the steam turbine generators in all directions.

    c. Over all bearing oil seals on the three steam turbine generators.

The system design guidelines recommend a minimum density of 0.30 gallons per minute per square foot (gpm/ft$^{2)}$ over 5,000 square feet (ft^2).

2. Providing protection of the diesel engine generators. Protection is recommended to be provided above and 20 feet beyond the two diesel generating units. The system design guidelines recommend a minimum density of 0.25 gpm/ft^2 over 3,000 ft^2.

B. NFPA 850–Recommended Practice for Fire Protection for Electric Generating Plants and High Voltage Direct Current Converter Stations

This standard recommends that the steam turbine and diesel engine generator area be protected with an automatic fire protection system.

All areas below the operating floor that are subject to oil flow, spray, or accumulation should be protected by an automatic sprinkler or foam-water sprinkler system. The system design guidelines recommend a minimum density of 0.30 gpm/ft^2 over 5,000 ft^2.

All lubricating oil lines should be protected, including any piping above the operating floor and within the turbine lagging (skirt). All ancillary piping and equipment containing the combustible liquid should be protected by this automatic fire protection system (e.g,. lube oil filter and associated piping).

The turbine generator bearings located on the operating floor should be protected with directional nozzles with a density of 0.25 gpm/ft^2 over the protected area of the bearings.

The exciter housing should be protected with a total flooding automatic carbon dioxide system.

Any clean or dirty oil storage areas within the facility should also be protected.

The area near the combustible liquid and operating equipment should either be provided with containment that does not contribute to flooding of equipment or endangering surrounding areas or to provide drainage to remove the liquids directly.

C. Electrical Power Research Institute (EPRI)–Turbine Generator Fire Protection by Sprinkler System

This standard recommends that an automatic fire protection system be installed for the generator area, bearings, turbine lagging, exciter, areas below operating floor, lube oil tanks, and ancillary piping. The recommendations are similar to those noted above for NFPA 850.

D. FM Global Data Sheets

Various data sheets from an alternative insurance carrier could be used as a reference in regard to the equipment in the generation plant. These guidelines are not requirements for this facility, however these data sheets are regarded as industry standards by some. These include the following:

1. Data Sheet 7-101–Fire Protection for Steam Turbine and Electric Generators

This standard recommends fire protection with a reliable, dedicated water supply. The fire protection system should provide 2 hours of protection and can be one of the following:

a. Wet System
b. Preaction System
c. Deluge System
d. Foam-Water System

Automatic sprinkler protection should be provided for the basement below the operating floor. The coverage should be provided for 20 feet in all directions beyond the pool fire hazard. The system design guidelines recommend a minimum density of 0.30 gpm/ft^2 over 5,000 ft^2.

The compressed air foam system (CAFS) option requires a concentrate and air supply to provide the full sprinkler discharge plus hose streams for a minimum of 20 minutes.

Protection of the operating floor should be a fixed, FM Approved, automatically actuated water-spray system with direction-spray nozzles or automatic sprinkler protection flowing 30 gpm per nozzle. Protection should be provided for:

a. The seal area and lube oil pipe connections to bearing housings.

b. Control oil systems with threaded or flanged fittings.

c. Main supply and return oil piping with threaded or flanged fittings.

d. Under turbine skirts (lagging) where oil piping is located.

e. Oil supply and return branch lines when they contain sight glasses or monitoring devices that can be damaged by heat from a fire or they are flanged or bolted above the operating floor at locations other than the bearing housing.

3.02 TRANSFORMER YARD

As noted previously, there currently is no fire protection installed in the transformer yard and containment is sized for the insulating oil volume of the largest transformer. The four transformers and the voltage regulator contain combustible insulating oil, and if one of these pieces of equipment causes a fire event, there is significant risk of losing all equipment within the transformer yard. Various industry standards recommend providing some level of protection for equipment containing combustible liquids. Federal regulations require secondary containment greater than that currently installed.

A. Code of Federal Regulations–Part 110–Discharge of Oil and Part 112–Oil Pollution Prevention

This facility is governed by these regulations in regard to the Federal Water Pollution Control Act, also commonly known as the Clean Water Act. This Act establishes requirements for the preparation and implementation of SPCC Plans. The SPCC Plan must address all relevant spill prevention, control, and countermeasures necessary at the specific facility.

Secondary containment areas are required to be constructed to provide storage for the entire capacity of the largest single container and sufficient freeboard to contain precipitation.

B. Starr Technical Risks Agency (Insurance Carrier)

The insurance carrier conducted a facility survey in 2013 after reacquiring the generation plant from another insurance carrier. The survey listed recommendations regarding fire protection of the outdoor transformer yard. The equipment was noted to be within 5 to 10 feet of each other and that a fire at one of the unprotected units would expose the other nearby units. A sprinkler system was recommended and should provide a sprinkler density of 0.25 gpm/ft^2 over the entire area of coverage.

It was also noted that sprinkler water runoff and contamination should be carefully considered because of the proximity to Lake Michigan.

C. NFPA 850–Recommended Practice for Fire Protection for Electric Generating Plants and High Voltage Direct Current Converter Stations

This standard recommends that outdoor oil-insulated transformers should be separated from adjacent structures and from each other by fire-rated walls, spatial separation, or other approved means for the purpose of limiting the damage and potential spread of fire from a transformer failure.

The firewall should be a 2-hour rated firewall and designed to withstand the effects of projectiles from exploding transformer bushings or lightning arrestors.

The spatial separation between equipment is a minimum of 25 feet. If a less flammable insulating oil is used in the equipment, the standard notes that equipment critical to power generation should still be separated by firewalls or spatial separation as noted above.

If the transformers do not meet the above criteria for spatial separation or firewalls, the equipment should be protected with an automatic water spray or foam-water spray system. Yard hydrants should also be considered for the protection of the transformer yard.

Drainage facilities for outdoor transformers should be provided to allow the leaking combustible fluid to drain away from structures and adjacent equipment. Where feasible, curbs or pits around each individual transformer should be considered to minimize the possibility of risking exposure to adjacent equipment. If open pits are provided, they should be provided with fire protection with a density of 0.15 gpm/ft^2 over the area of the pit.

D. NFPA 15–Water Spray Fixed Systems for Fire Protection

This standard recommends transformer protection by complete water spray impingement on all exposed exterior surfaces. The coverage shall be applied at not less than 0.25 gpm/ft^2 of the projected area of rectangular prism envelope for the transformer and its appurtenances and not less than 0.15 gpm/ft^2 on the nonabsorbing ground surface area of exposure.

E. IEEE 979-2012–IEEE Guide for Substation Fire Protection

This guide recommends the primary way to provide protection for oil-insulated transformers is to provide spatial separation. Where spatial separation is not feasible or provided, automatic fire protection or fire barriers are recommended.

Outdoor oil-insulated transformers should be separated from the anticipated flame fronts of one another by a minimum of 25 feet. Adjacent equipment should be no closer than 35 feet to an adjacent piece of mineral oil-insulated equipment's flame front or containment boundary.

An oil spill containment system should be designed in accordance with *IEEE 980-2013–IEEE Guide for Containment and Control of Oil Spills in Substations*. The containment volume should allow for precipitation (25-year, 24-hour rain event), automatic fire suppression systems, and manual firefighting activities, as applicable.

Fire barriers may be installed as a means of passive separation protection when the minimum spatial separation distances are not achieved. These barriers should be designed to withstand wind loads, seismic loads, and blast pressures, as applicable.

Active automatic fire suppression systems can be installed in lieu of or in addition to the barriers.

The guide notes that using an alternative dielectric insulating liquid with a high fire point to minimize the likelihood and impact of fires should be considered.

F. IEEE 980-2013–IEEE Guide for Containment and Control of Oil Spills in Substations

This guide provides recommendations on secondary containment for oil-insulated equipment. The oil containment system should be sized to contain the volume of oil in the single largest oil-filled piece of equipment, plus any accumulated water from sources such as rainwater (25-year, 24-hour rain event), melted snow, and water spray discharge from fire protection systems.

G. 2012 International Fire Code

This Code indicates the requirements for secondary containment inside and outside of facilities.

Indoor design requires that the secondary containment be constructed to contain a spill from the largest vessel plus the design flow volume of fire protection water calculated to discharge from the fire-extinguishing system over the minimum required system design area or area of the room or area in which the storage is located, whichever is smaller. The containment capacity shall be designed to contain the flow for a period of 20 minutes.

Outdoor design requires that the secondary containment be constructed to contain a spill from the largest individual vessel plus the volume of a 24-hour rainfall as determined by a 25-year storm. Provisions for draining accumulations of groundwater and rainwater shall be included in the design.

H. FM Global Data Sheet 5-4–Transformers

This standard discusses recommendations for separation, containment, and fire protection of outdoor transformers.

Since the insulating oil is a non-FM Approved fluid, the separation distance is recommended to be a minimum of 25 feet. The separation distance noted applies to the closest edge of the equipment containment.

Where the separation distance cannot be met, a 2-hour fire-rated barrier between equipment is recommended.

Where neither separation nor fire barriers are installed, installation of a water spray protection system for each transformer is recommended. The design criteria for the protection system is noted to be 0.30 gpm/ft^2 over the transformer surfaces as well as over the entire secondary containment area surrounding the equipment.

Secondary containment is recommended to meet *IEEE 980-2013–IEEE Guide for Containment and Control of Oil Spills in Substations*. The containment should be designed for a 60-minute discharge of fire hoses plus the design flow of the water spray system.

3.03 CODES, STANDARDS, AND REFERENCES SUMMARY

Various codes, standards, and references apply to the areas under review in this assessment. While the specific recommendations and requirements may vary slightly, in general all recommend some level of protection. For the generation plant, protection for the equipment as well as the basement is referenced in all documents. For the transformer yard, protection for the equipment is recommended whether it be through fire protection, separation distance, fire barriers, or high fire point insulating fluids. Secondary containment is recommended by all documents.

SECTION 4
EVALUATION OF ALTERNATIVES

This section discusses the solutions that were considered and researched for the generation plant and transformer yard. There are various technologies and systems available today; however, not all were researched because of not being commonly accepted by all referenced standards, feasibility of implementing the solutions, and cost-prohibitive nature of the potential solution.

4.01 GENERATION PLANT

A. Fire Protection

All references and standards recommend the installation of a fire protection system to protect the equipment and the combustible liquids associated with it. The extents and coverage recommendations from each of the references and standards vary.

Two systems were researched to provide the recommended protection.

1. Wet Sprinkler System

The existing water distribution system within the generation plant is not a suitable connection point for a water-based fire protection system. NFPA 13–Installation of Sprinkler Systems indicates that water supplies shall be capable of providing the required flow and pressure for the required duration. With the high service lift pumps operational, this distribution system meets both the flow and pressure requirements for the sprinkler systems. However, if there were a fire event in the generation plant or the transformer yard, these pumps could potentially be unavailable to provide water to the fire protection system.

Furthermore, the existing connection to the municipal distribution system has check valves that prevent the flow of water back to the generation plant. These were installed to prevent flooding of the generation plant. However, even if they were removed, there would be insufficient pressure and flow to supply the required fire protection demands if the high service lift pumps were not operational. Therefore, the existing water distribution system is considered an unreliable water source. The local Authority Having Jurisdiction was consulted by Village personnel and agreed with this assessment.

In order to provide a wet fire protection system, a fire pump is required to provide the necessary flow and pressure. The fire pump would be a vertical split case type located in a fire pump room to be constructed in the basement of the generation plant. The fire pump room will be located in the previous footprint of the low lift pumps that have since been relocated to the low lift pump house adjacent to Lake Michigan. Two options for constructing the fire pump room were considered: basement level and subbasement level.

The basement level fire pump room would involve filling in a portion of the 7-foot-deep sump area below the diamond plate grating in the basement so that the floor elevation of the new fire pump room would match the floor elevation of the basement. The subbasement level fire pump room would involve sealing off a portion of the 7-foot-deep sump area and including metal stairs down to the sump pit area where the fire pump and piping would be installed. Both fire pump rooms would require a fire-rated wall structure to the underside of the operating floor. This would

require the relocation of various electrical conduits, conductors, duct banks, and panels. currently installed in this area. See Appendix D–Fire Pump Room Layout Drawings for reference.

The sprinkler system could be either a standard wet sprinkler system with fusible links or a preaction system. The standard wet system would release water upon the break of the fusible link within a sprinkler head caused by either heat or mechanical damage. The preaction system requires two modes of detection prior to water discharge. For example, if there is a sprinkler head similar to the standard wet system that breaks because of heat and also a fire or smoke detector that confirms there is a fire, a valve opens to allow water to discharge from the sprinkler. If the sprinkler head breaks because of mechanical damage and there is no fire or smoke detector saying there is a fire, the valve will not open and water will not discharge.

Figure 4.01-1 Potential Fire Pump Location

2. Compressed Air Foam System (CAFS)

CAFS is a mixture of water, foam, and compressed air and is used as an extinguishing agent. The foam solution in this application would be a Class B aqueous film-forming foam concentrate applied at a concentration of 3 percent. Compressed air is added to the water-foam solution to create a higher expansion foam than is typically provided by a standard foam eductor. CAFS has the ability to stick to horizontal and vertical surfaces versus just providing a horizontal blanket characteristic of typical foam water delivery systems. The advantage of CAFS is that it blankets the fuel, preventing the fuel's capacity to seek a source of oxygen, adheres to surfaces aiding in the reduction in heat, and shields the fuel source from radiant energy because of the opaque surface of the foam.

CAFS can be provided to operate with a connection to the water supply or as a stand-alone system that includes a pressurized water tank that does not require a connection to the water supply. Because the water supply is deemed unreliable and a fire pump is required for any fire flow requirements, the stand-alone system was the only system considered.

A system of piping specifically designed for balanced flow to local spray nozzles would be installed surrounding the diesel generators, diesel day tanks, and the steam turbine lube oil tanks and piping and the turbine bearings on the operating floor. Dedicated floor space is required for the tanks and equipment associated with this system. See Appendix E–CAFS Equipment Installation Location for additional information.

3. Monetary Costs

The basis for the monetary cost evaluation is described in Section 5.02.

4. Nonmonetary Considerations

Table 4.01-1 provides a list of nonmonetary alternatives and the advantages and disadvantages of each.

Alternative	Advantages	Disadvantages
Wet Sprinkler System	▪ Conventional system familiar to installing contractors. ▪ Does not require specialty fire protection equipment.	▪ Requires quarterly and yearly maintenance. ▪ Requires fire pump for operation.
CAFS	▪ Requires less water for extinguishment and requires less containment. ▪ Self-contained system with no required water connection. ▪ Foam is generally more effective at extinguishing Class B fires. ▪ Potentially eliminates need for fire pump at plant.	▪ Newer technology and less contractor familiarity ▪ Does not permit the flexibility to provide sprinkler protection for the entire generation building.

Table 4.01-1 Nonmonetary Alternatives

B. Containment

Generally, references and standards recommend providing containment for preventing the combustible liquid from migrating to other parts of the facility. However, the insurance carrier does not specifically call for changes to existing conditions. Furthermore, none of the references or standards appear to be retroactive or adopted as Code. Therefore, no changes are recommended to the existing interior containment conditions. The lube oil tanks and the diesel fuel day tanks are all located in the basement of the generation plant. If a leak were to occur, containment and drainage are provided by existing sanitary floor drains and piping pits located throughout.

4.02 TRANSFORMER YARD

All references and standards recommend the installation of a system to protect the equipment should adjacent equipment be involved in a fire event. There are various systems that are acceptable to the differing references and standards.

A. Equipment Upgrades or Modifications

The primary reason there is a recommendation for fire protection of the transformer equipment is that the spatial separation recommended by the references and standards is not met and the four transformers and the voltage regulator contain combustible insulating oil. Upgrading or modifying the existing equipment is an option to reduce the risk of equipment loss.

1. Retrofilling of Equipment

IEEE 979–IEEE Guide for Substation Fire Protection notes that in order to reduce the fire risk, it is possible to replace the combustible insulating oil with high fire point insulating fluids. Retrofilling the equipment with high fire point insulating fluids would practically eliminate the risk of fire.

This is feasible with replacement transformers as they are routinely provided with high fire point insulating liquids. The viscosity of the high fire point insulating fluids changes with colder temperatures. This is not a concern with transformers; however, because of the mechanical operation of the voltage regulator, this equipment cannot be retrofilled with a high fire point insulating fluid. NFPA 850 notes that if the equipment is critical to power generation, firewalls or spatial separation is still recommended after retrofilling is completed.

Implementing this solution will require additional measures for mitigating the risk of fire within the transformer yard.

2. Equipment Replacement

Replacing the transformers is also an option. The expected useful life for a liquid-filled transformer is approximately 40 to 50 years. If the expected useful life of the equipment is approaching, it may be a viable option to replace some or all of the equipment. The new transformers can be provided with the high fire point insulating fluid. However, as noted above, the voltage regulator cannot be provided with a high fire point insulating fluid and therefore is not recommended to be replaced.

Equipment	Manufacturer	Serial Number	Transformer Installed
Transformer No. 1	General Electric	G859833	1970
Transformer No. 2	General Electric	G859832A	1970
Transformer No. 3	Magnetek	A2183T	1995
Spare Transformer	General Electric	G859832B	1970

Table 4.02-1 Transformer Yard Equipment Information

A combination of retrofilling and equipment replacement is also a viable option if only a few pieces of equipment are nearing the end of their useful life. This option would allow for implementation over various fiscal budgets.

Implementing this solution will require additional measures for mitigating the risk of fire within the transformer yard.

3. Monetary Costs

The basis for the monetary cost evaluation is described in Section 5.02.

4. Nonmonetary Considerations

Table 4.02-2 provides nonmonetary alternatives and the advantages and disadvantages of each.

Alternative	Advantages	Disadvantages
Equipment Replacement	▪ Replaces aging equipment. ▪ Replacement can be phased into various fiscal budgets. ▪ Does not require fire protection system or barrier protection between transformers.	▪ Cannot purchase replacement voltage regulator with high fire point fluid. ▪ Additional risk mitigation would still be required beyond this alternative.
Retrofilling of Transformers	▪ Replacement can be phased into various fiscal budgets. ▪ Does not require fire protection system or barrier protection between transformers.	▪ Reuses existing aged equipment. ▪ Cannot replace voltage regulator with high fire point fluid. ▪ Additional risk mitigation would still be required beyond this alternative.

Table 4.02-2 Equipment Upgrade of Modification Nonmonetary Alternatives

B. Spatial Separation

All references and standards recommend that equipment be installed a minimum of 25 to 35 feet apart (depending on which standard is referenced). This spatial separation is considered an acceptable means to mitigating the risk of one piece of equipment involved in a fire event from risking the adjacent equipment (Figure 4.02-1). However, because this is an existing installation and the spatial separation is not currently met, this is not an option for satisfying the insurance carrier or meeting the references and standards.

Figure 4.02-1 Transformer Yard Spatial Separation

C. Fire Protection

All references and standards recommend the installation of a fire protection system as an option where spatial separation cannot be achieved.

Two systems were researched to provide the recommended protection.

1. Deluge Sprinkler System

The deluge sprinkler system would require the installation of a fire pump to meet the pressure and flow requirements of the system as noted above. This system would be an electric release type system and be designed as a single zone to release water on all equipment and secondary containment if a fire event were detected.

The fire pump would be installed as noted above under the generation plant wet sprinkler system. Distribution piping would be routed from the fire pump room in the generation plant basement through the pipe gallery under the water treatment plant. From there, the piping would be buried below grade from the water treatment plant to the transformer yard. The deluge valve and controls would be located within the pipe gallery.

The amount of water discharged from a deluge system will greatly impact the secondary containment requirements.

2. Compressed Air Foam System (CAFS)

As noted in the generation plant section, the CAFS can be provided to operate with a connection to the water supply or as a stand-alone system. The skid system would be located in the same general area where the potential fire pump room would be constructed.

A central system can be provided with distribution piping routed to the two hazard locations. This would provide a single location for all system equipment. Various zones would be designed into the system so that only the zone experiencing a fire event would be provided with the CAFS solution.

The amount of water is reduced significantly for a CAFS but will still need to be considered when sizing a secondary containment system.

3. Monetary Costs

The basis for the monetary cost evaluation is described in Section 5.02.

4. Nonmonetary Considerations

The general disadvantage associated with either of these two options is the high capital cost as shown in Table 4.02-3.

Alternative	Advantages	Disadvantages
Deluge Sprinkler System	▪ Conventional system familiar with installing contractors. ▪ Does not require specialty fire protection equipment.	▪ Requires quarterly and yearly maintenance. ▪ Requires fire pump for operation. ▪ Detection system can be prone to false releases. ▪ Requires larger secondary containment facilities for fire protection runoff.
CAFS	▪ Requires less water for extinguishment and requires less secondary containment. ▪ Self-contained system with no required water connection. ▪ Foam is generally more effective at extinguishing Class B fires. ▪ Potentially eliminates need for fire pump at plant.	▪ Newer technology and less contractor familiarity.

Table 4.02-3 Fire Protection Nonmonetary Alternatives

D. <u>Fire Barriers</u>

All references and standards recommend the installation of fire barriers as another option where spatial separation cannot be met. The fire barrier shall be 2-hour rated and designed to withstand the effects of projectiles from exploding transformers. Electrical clearances and access for equipment need to be considered before this option can be implemented. The existing equipment is installed in proximity to each other making it difficult to install fire barriers between the equipment without obstructing access or code-required clearances.

The fire barriers can be either a prefabricated system or a built-in-place assembly, such as a block wall with filled cores, precast concrete panels, or poured-in-place concrete walls. All wall systems will require a foundation.

Existing nitrogen cylinders located in the secondary containment structure will need to be relocated to avoid being in the way of the installed fire barriers.

Figure 4.02-2 Transformer Nitrogen Cylinders

E. Containment

All codes, standards, and references require secondary containment around this equipment.

There is an existing secondary containment structure in place surrounding the equipment. The facility has an SPCC plan that notes the existing secondary containment is sized for the largest transformer oil volume. There is a sump and a pump that is operated manually to discharge collected rainwater. It was noted by utility personnel that there is a bentonite clay liner below the secondary containment curb area to direct all liquid to the sump. This has not been confirmed, and no information is available through soil borings or drawings indicating this liner is in place. Because of the proximity to Lake Michigan, secondary containment is extremely important and necessary.

All codes, standards, and references note that the containment volume should take into consideration three factors when being sized: (1) the largest transformer oil volume, (2) the rainfall from a 25-year, 24-hour rain event, and (3) fire protection water applied to the equipment. Fire protection of the entire secondary containment area needs to be considered if combustible liquids are not contained at each piece of equipment. Ideally, containment would be provided around each individual piece of equipment to avoid a pool fire risking surrounding equipment.

There are various options for providing this secondary containment that have been reviewed as a part of this assessment.

1. Expansion of Secondary Containment Structure

The existing secondary containment structure is approximately 4 inches tall and matches the concrete equipment pads below the equipment. Extending the existing curb to a taller height is not an option as this would potentially expose the existing equipment to flooding. Removing the

concrete curb along the south edge and east of the capacitor bank and extending the containment structure into the existing parking area south of the transformer yard is an option.

The grade within the existing secondary containment structure (Figure 4.03-3) would be pitched to this opening, and a deeper pit would be installed for the liquid to drain to. This would require modifying the existing fencing, providing grating over the pit, relocating the sump pump, and modifying the existing electric manhole south of the existing secondary containment area.

Figure 4.02-3 Secondary Containment Extension

2. Oil/Water Separator

A large oil/water separator system could be installed below grade to the south of the existing secondary containment structure. Modifications to the existing secondary containment area would include installing a drain system to route the liquids to the underground separator. The separator would be sized for the anticipated flow rate (e.g., insulating oil, rainfall, and fire protection system). Downstream of the oil/water separator, a new storm sewer lateral would be required to route the water to the existing on-site storm sewer. Any oil would be captured within the separator and would then be removed by a disposal company.

3. Oil Solidification

The oil solidification system is a product that acts as a filter. Water can pass through the material at a rate of approximately 6 gpm/ft^2; however, the polymer mix within the material will solidify and prevent any hydrocarbons from passing through. Typically, the system is installed in a berm or containment wall where the material is installed over an opening in that berm or wall. The grading is sloped to make all liquid pass through the material before leaving the containment area and flowing to local grade. If oil were to leak and be sent to the material, it would solidify and then all liquids would be retained upstream of the material.

This system would require excavation of the existing rocks and grade material surrounding the equipment and within the existing secondary containment structure. To provide the necessary containment as noted above, the grade would be excavated down some distance (potentially 12 to 18 inches). A polyvinyl liner would be installed to direct the liquid toward the opening with the oil solidification material and prevent the liquid from seeping into the ground. Three-quarter-inch to one-inch washed stone would then be placed on the polyvinyl liner. These rocks act as a fire suppression system for the containment area since the lack of oxygen at the base of the rocks during a fire event will prevent fire from burning any liquid that accumulates on the polyvinyl liner. On the outlet side of the oil solidification material, a new storm sewer lateral would be required to route the water to the existing on-site storm sewer.

In order to have the appropriate amount of secondary containment, expanding the secondary containment structure to the south may be required.

3. Monetary Costs

The basis for the monetary cost evaluation is described in Section 5.02.

4. Nonmonetary Considerations

Table 4.02-4 provides nonmonetary alternatives and the advantages and disadvantages of each.

Alternative	Advantages	Disadvantages
Expansion of Secondary Containment Structure	▪ Localized discharge of storm water location. ▪ System is similar to existing installation, but on a larger scale. ▪ Easy to manage oil disposal and cleanup. ▪ Visual inspection required to determine if there is a leak.	▪ Lose local parking adjacent to water treatment facility .
Oil/Water Separator	▪ Automatic, continuous flow. ▪ Manual sump pump operation for rainwater is no longer required. ▪ Easy to manage oil disposal and cleanup.	▪ Requires drainage pipe from buried separator to onsite storm sewer.
Oil Solidification	▪ Automatic, continuous flow until an oil leak is detected.	▪ Requires drainage pipe from buried separator to onsite storm sewer. ▪ Requires oil solidification material replacement if there is a leak.

Table 4.02-4 Containment Nonmonetary Alternatives

F. <u>Barrier Wall</u>

The existing transformer yard is surrounded by chain link fence. There are wooden bollards along the northwest corner of the fence adjacent to the public access street leading to the adjacent beach. The barrier wall is an item to consider but is not an insurance carrier, standard, or reference recommendation.

The barrier wall would be built to block the view of the transformer yard for a more aesthetically pleasing view to the public. The wall would also be built to protect the transformer yard from vehicle traffic. There are currently wooden bollards installed to provide limited protection. The wall would also provide protection to the public should a transformer explode. Currently, there is no protection for the public access from an explosion.

An existing high pressure gas main (Figure 4.02-4) is located along the edge of the road. This would need to be considered when designing and installing the barrier wall.

Figure 4.02-4 High Pressure Gas Main Location

Figure 4.02-5 Two Electric Manholes in Secondary Containment

G. Electrical Duct Sealing

There are two existing electric manholes within the chain link fence that provide conductor routing from the equipment to the adjacent control building (Figure 4.02-5). The elevation of the top of these electric manholes is below the height of the containment and equipment curbs. In the past, there has been water leakage through the electric manhole covers to the control building because of rain events. Modifications to the electric manholes is recommended to prevent water from entering the duct banks.

The top of the electric manholes should be equal to or higher than the containment curb elevation. Extending the height of the manhole covers and providing a watertight cover are recommended. Sealing the conductor penetrations into the manholes is also recommended to prevent water from seeping in through those penetrations.

There is an existing electric manhole located to the south of the existing secondary containment area (Figure 4.02-6). If the secondary containment area expands to the south, this electric manhole will also need to be modified similar to the electric manholes currently inside the secondary containment.

Figure 4.02-6 Electric Manhole South of Secondary Containment

Figure 4.02-7 Electric Manhole North of Secondary Containment

The electric manhole located north of the secondary containment area will not be affected by the modifications, but replacement of the cover should be considered to make this watertight as well (Figure 4.02-7).

SECTION 5
FISCAL IMPACT ANALYSIS

This section provides an analysis of the project budgetary impact of the proposed modifications to the generation plant and the transformer yard.

5.01 PROJECT COST AND FUNDING

The project cost of the proposed modifications will depend upon which method of protection and containment is recommended. The opinion of probable construction cost (OPCC) for the various options is in Section 5.02.

The funding for any implemented changes will be through the Village capital budget process. Depending on the recommendations, it may be feasible to break the implementation into various fiscal years.

5.02 CONSTRUCTION COST OPINION OPTIONS

Three overall options were compiled to provide the necessary secondary containment and protection for the generation plant and transformer yard equipment. A detailed OPCC is provided in the appendices for all considered protection and secondary containment systems.

Retrofilling of Equipment		
Construction Item	Cost[a]	
Transformer Yard		
Retrofilling of Equipment	$	661,000
Fire Barriers	$	124,000
Secondary Containment	$	110,000
Barrier Wall	$	103,000
Electric Manhole Modifications	$	33,000
Subtotal A	$	1,031,000
Generation Plant		
Wet System	$	176,000
Fire Pump	$	638,000
Subtotal B	$	814,000
Total	$	1,845,000

[a] Based on budgetary equipment costs and January 2015 construction cost data.

Table 5.02-1 Option 1 Retrofilling of Equipment

Equipment Replacement		
Construction Item	Cost[a]	
Transformer Yard		
Equipment Replacement	$	1,445,000
Fire Barriers	$	124,000
Secondary Containment	$	110,000
Barrier Wall	$	103,000
Electric Manhole Modifications	$	33,000
Subtotal A	$	1,815,000
Generation Plant		
Wet System	$	176,000
Fire Pump	$	638,000
Subtotal B	$	814,000
Total	$	2,629,000

[a] Based on budgetary equipment costs and January 2015 construction cost data.

Table 5.02-2 Option 2 Equipment Replacement

Wet Fire Protection System		
Construction Item	Cost[a]	
Transformer Yard		
Transformer Yard Deluge System	$	213,000
Fire Barriers	$	377,000
Secondary Containment	$	240,000
Barrier Wall	$	103,000
Electric Manhole Modifications	$	33,000
Subtotal A	$	966,000
Generation Plant		
Wet System	$	176,000
Fire Pump	$	638,000
Subtotal B	$	814,000
Total	$	1,780,000

[a] Based on budgetary equipment costs and January 2015 construction cost data.

Table 5.02-3 Option 3 Wet Fire Protection System

Compressed Air Foam System (CAFS)		
Construction Item	Cost[a]	
Transformer Yard		
CAFS	$	213,000
Fire Barriers	$	377,000
Secondary Containment	$	110,000
CAFS Equipment	$	1,156,000
Barrier Wall	$	103,000
Electric Manhole Modifications	$	33,000
Subtotal A	$	1,992,000
Generation Plant		
CAFS	$	90,000
Subtotal B	$	90,000
Total	$	2,082,000

[a] Based on budgetary equipment costs and January 2015 construction cost data.

Table 5.02-4 Option 4 Compressed Air Foam System

SECTION 6
RECOMMENDATIONS

6.01 PROJECT RECOMMENDATIONS

Based on evaluations of the considered systems and solutions presented previously, we recommend providing a wet protection system for the turbines within the generation plant and a deluge fire protection system for the transformer yard.

A. Generation Plant

1. Fire Protection

A conventional wet fire protection system is recommended for the protection of the lube oil and diesel engine turbine equipment. Since the recommended protection areas almost incorporate the entire basement, we would further recommend providing sprinkler protection throughout the entire basement below the operating floor and that cost is included in the OPCC.

2. Secondary Containment

Modifications to the existing secondary containment within the generation plant are not recommended.

B. Transformer Yard

1. Equipment Upgrades or Modifications

Equipment replacement and retrofilling were reviewed in order to minimize the requirements in the transformer yard. Neither option was selected for various reasons.

Retrofilling of the transformers is not a prudent option considering that three of the transformers are 45 years old. The equipment is nearing the end of its useful life and will require replacement in the future. This would be a high capital investment for a short-term solution.

Replacement of the transformers was not selected because of the high capital investment required. As noted previously, the transformers are nearing the end of their useful life. The voltage regulator cannot be replaced with equipment that does not have combustible fluid. Therefore, we cannot avoid the need for fire barriers nor a deluge sprinkler system for that piece of equipment. If replacement of these transformers is scheduled and budgeted in the near future, this option should be seriously considered. However, there is a high capital cost associated with this option.

2. Spatial Separation

Providing the recommended spatial separation to avoid fire protection of the equipment is not a feasible option because of the existing site constraints.

3. Fire Protection

Providing fire protection to the transformers with a deluge system supplied by a fire pump is recommended because it has the lowest capital cost. An additional benefit to this selection is that it provides the infrastructure needed to provide sprinkler protection to both the water treatment and power generation plants if that becomes a requirement in the future.

4. Fire Barriers

Fire barriers are recommended to be installed between all equipment containing combustible liquids. This will isolate each piece of equipment from surrounding equipment to help mitigate the collateral damage if an adjacent piece of equipment were to be on fire or explode. A prefabricated fire barrier wall system is the most cost-effective option for providing this protection.

5. Containment

Existing secondary containment for the transformer yard does not meet current federal regulations. Expanding the existing secondary containment structure is the most cost-effective solution to meeting the federal regulations and applicable standards and references.

6. Barrier Wall

Installation of a barrier wall is not required to meet existing regulations, standards or references; however, it is recommended to be implemented. The barrier wall will provide protection for both the public as well as the equipment should an unexpected event occur. Aesthetics are very important to the Village as well, and a side benefit of this barrier wall is to hide industrial equipment from public view.

7. Electrical Duct Sealing

The existing electric manholes are at grade level and have had issues with water leaking into them in the past. Elevating the top of the manholes to above the containment curb and sealing the conductor penetrations will greatly reduce the risk of water migration into the manholes and conductor runs to the Control Building. It is recommended these modifications be implemented.

6.02 PHASING OF CONSTRUCTION

It is our understanding that the recommendations would likely be phased in over several fiscal years to minimize the impact to capital budgets. The following four construction phases are recommended:

- Phase 1 (3rd Quarter 2015)–Construct secondary containment facilities, install fire-rated wall barriers around existing transformers, and make electrical duct sealing improvements.
- Phase 2 (4th Quarter 2016)–Install electrical infrastructure for fire pump along with the pump room. The actual fire protection equipment will be installed during Phase 3.
- Phase 3 (1st Quarter 2017)–Install the transformer deluge system, install the generation building wet system, and install the fire pump.
- Phase 4 (2nd Quarter 2018)–Install the barrier wall north of the transformer yard.

The proposed phasing provides a more equal distribution of capital over the associated time period. The disadvantage of this schedule is that it does not address the risks necessarily in the most timely manner.

6.03 PROJECT COSTS

The overall project capital costs for Phase 1 are indicated in Table 6.03-1.

Construction Item	Cost[a]
Fire Barriers	$377,000
Secondary Containment	$240,000
Electrical Manhole Modifications	$33,000
Opinion of Total Project Cost	**$650,000**

[a] First Quarter 2015 basis.

Table 6.03-1 Phase 1 Opinion of Probable Cost

The total capital cost for the Phase 2 project (in January 2015 dollars) is presented in Table 6.03-2 and is projected to be about $555,000 in addition to the Phase 1 cost. This includes construction of the electrical infrastructure required to operate the fire pump as well as the fire pump room. The timing of this particular phase is important in that Phases 2 and 3 need to be concurrent in order to provide a functional system. In reality, Phases 2 and 3 are one project; however, on a fiscal and scheduling basis they are separate.

Construction Item	Cost[a]
Fire Pump Room and Electrical Construction	$555,000
Opinion of Total Project Cost	**$555,000**

[a] First Quarter 2015 basis.

Table 6.03-2 Phase 2 Opinion of Probable Cost

The total capital cost for the Phase 3 project (in January 2015 dollars) is presented in Table 6.03-3 and is projected to be about $472,000 in addition to the Phase 1 and 2 costs.

Construction Item	Cost[a]
Fire Pump Installation	$83,000
Transformer Yard Fire Protection	$213,000
Generation Plant Fire Protection	$176,000
Opinion of Total Project Cost	**$472,000**

[a] First Quarter 2015 basis.

Table 6.03-3 Phase 3 Opinion of Probable Cost

The total capital cost for the Phase 4 project (in January 2015 dollars) is presented in Table 6.03-4 and is projected to be about $103,000 in addition to the Phase 1, 2, and 3 costs.

Construction Item	Cost[a]
Barrier Wall	$103,000
Opinion of Total Project Cost	**$103,000**

[a] First Quarter 2015 basis.

Table 6.03-4 Phase 4 Opinion of Probable Cost

6.04 PROJECT IMPLEMENTATION SCHEDULE

Table 6.04-1 presents a preliminary schedule for design and construction of the project. The proposed schedule assumes that the project will be broken into multiple fiscal budget phases.

Village Approves Project	April 2015
Phase 1	
Village Authorizes Design Services	May 2015
Engineering Complete/Advertise for Bids	June 2015
Open Bids	July 2015
Issue Notice to Proceed	September 2015
Phase 1 Substantial Completion	March 2016
Phase 1 Final Completion	May 2016
Phase 2	
Village Authorizes Design Services for Phases 2 and 3	October 2015
Engineering Complete/Advertise for Bids	January 2016
Open Bids	February 2016
Issue Notice to Proceed	May 2016
Phase 2 Substantial Completion	November 2016
Phase 2 Final Completion	December 2016
Phase 3	
Advertise for Bids	September 2016
Open Bids	October 2016
Issue Notice to Proceed	December 2016
Phase 3 Substantial Completion	April 2017
Phase 3 Final Completion	May 2017
Phase 4	
Village Authorizes Design Services	November 2016
Engineering Complete/Advertise for Bids	January 2017
Open Bids	February 2017
Issue Notice to Proceed	May 2017
Phase 4 Substantial Completion	September 2017
Phase 4 Final Completion	October 2017

Table 6.04-1 Anticipated Implementation Schedule

APPENDIX A
INSURANCE CARRIER SURVEY REPORT

STARR TECHNICAL RISKS AGENCY, INC.

Village of Winnetka

Water & Electric Department

Winnetka, IL

2013 Survey Report

All Starr Technical Risks Agency, Inc. (Starr Tech) inspections, recommendations, statements, programs and literature contained herein are purely advisory and for the purpose of assisting insureds in the evaluation of their loss control and operational procedures. No responsibility for management and/or implementation of loss control and operational procedures or programs is assumed by Starr Tech. Starr Tech expressly disclaims any and all liability as to any results obtained or arising from any use of or reliance on such information. Neither Starr Tech's right to make inspections nor the making thereof nor any report thereon nor the recipient's compliance with recommendations, programs or literature shall constitute an undertaking, on behalf of or for the benefit of the recipient or any insured or others, to determine or warrant that any subject property is safe or healthful, or is in compliance with any law, rule or regulation. No insurance coverage for which an application may have been submitted to Starr Tech is deemed to be approved or bound in any manner. (rev. 1.08)

SURVEY ACTIVITY

SURVEY DATE: July 24, 2013

BY: Howard S. Rue III

CONFERRED WITH: Mr. Jeff Pietka – Power Plant Superintendent

This was a resurvey by Starr Tech for an insurance property loss survey of this facility. The survey consisted of a visual inspection of the boilers, generators, storage, and critical support and ancillary areas of the plant. In addition, key management programs such as plant safety, inspections, maintenance, and emergency planning were also reviewed. A plant tour was given by Mr. Pietka.

The facility had been insured by another insurance company for several years and Starr Tech reacquired the facility in 2012.

There were no new recommendations as a result of this visit. There are four completed and two repeated recommendations.

.

© All Rights Reserved

RECOMMENDATIONS

The following Risk Improvement Recommendations are made in the interest of reducing loss by fire, explosion and allied perils. They have been developed based on national codes and standards, industry best practices, and/or sound loss control judgment. Recommendations are categorized in the following manner based on severity:

PRIORITY: Recommendations to correct conditions that are serious enough to affect the overall level of risk to the facility or that represent an immediate potential for property and/or business income loss. Completion of these recommendations will greatly improve the risk profile but also may require corporate support for capital expenditure. Starr Tech suggests that these items be given top priority in risk improvement planning and budgeting,

IMPORTANT: Recommendations to correct specific conditions to achieve and maintain a tolerable level of property protection. Completion of these items is warranted to improve existing loss control measures and to introduce fundamental loss control techniques.

ADVISORY: Recommendations to correct deficiencies that are maintenance in nature or that do not substantially affect the overall level of risk at the facility. These items typically address planning, procedural or record keeping issues as well as capital improvements that may not be economically justified at the present time. Starr Tech suggests that implementation of any non-capital improvements be undertaken immediately and that systems for ongoing compliance be established.

It is requested that written response to all items be provided within 90 days of the receipt of this report.

PRIORITY RECOMMENDATIONS

None

IMPORTANT RECOMMENDATIONS.

2009-2 Transformer Sprinkler Protection

During our survey, it was observed that there is no fire protection on the outside transformers. Automatic sprinkler protection should be provided for the three transformers, the spare transformer, and the voltage regulator.

These units are all in one area and are within 5 to 10 feet of each other. A fire at one of these unprotected units would expose the other nearby units. The sprinkler system should be designed to provide a sprinkler density of 0.25 gpm/sq. ft. over the entire area of coverage. In accordance with NFPA 850, *Fire Protection for Electric Generating Plants and High Voltage Direct Current Converter Stations.* Sprinkler water run-off and contamination should also be carefully considered due to the proximity to Lake Michigan.

Should this project be approved, all plans should be forwarded to the Chicago Office of Starr Technical Risks Agency, Inc. at 500 West Monroe, Chicago, IL 60661 for review and comment prior to the commencement of any field work.

© All Rights Reserved

RECOMMENDATIONS (Cont'd)

2009-3 Sprinkler System Upgrades

- **Lubrication Oil Area**

It was found that there is a need to provide protection against a fire involving combustible lubricating oils at this facility. Automatic sprinkler protection should be provided in the following areas:

a. Provide coverage over and 20 ft. beyond all permanent tanks of lubricating oil.

b. The existing sprinkler protection provided over the oil reservoirs on the turbine generators should be extended 30 ft. beyond the reservoirs in each direction.

c. Sprinklers should be provided over all bearing oil seals on the three turbine generators.

By providing sprinkler protection over these pieces of equipment, a fire involving the combustible lubrication oils could be controlled and limit damage. Sprinklers should be designed to provide a minimum density of 0.30 gpm/sq. ft. over 5,000 sq.ft. the areas noted per NFPA 850, *Fire Protection for Electric Generating Plants and High Voltage Direct Current Converter Stations.*

- **Diesel Engine Generators**

Automatic sprinkler protection should be provided above and 20 ft. beyond the two diesel generating units. Due to the combustible diesel fuel used in these units, sprinkler protection is warranted. Sprinkler protection should be designed for a density of 0.25 gpm/sq. ft. over the hydraulically most remote 3,000 sq.ft. using 286°F rated heads noted per NFPA 850, *Fire Protection for Electric Generating Plants and High Voltage Direct Current Converter Stations.*

Should these projects be approved, all plans should be forwarded to the Chicago Office of Starr Technical Risks Agency, Inc. at 500 West Monroe, Chicago, IL 60661 for review and comment prior to the commencement of any field work.

© All Rights Reserved

APPENDIX B
SYSTEM INFORMATION AND DATA

FR3™

ENVIROTEMP™ NATURAL ESTER FLUID

Envirotemp™ FR3™ fluid

THE NATURAL ESTER SOLUTION.

Envirotemp FR3 fluid is a natural ester fluid derived from renewable vegetable oils – providing environmental benefits that are superior to mineral oil and unsurpassed by any other dielectric coolants.

- Ultimately biodegradable as designated by the EPA
- Reduced carbon footprint – 56x less carbon emissions than mineral oil
- Non-toxic – Contains no petroleum, halogens, silicones or sulfurs
- Maintains dielectric strength in cold temperatures

High fire point delivers improved fire safety

FR3 fluid possesses a 100% fire safety record making it the ideal choice for transformers positioned indoors, underground, and in close proximity to buildings and other equipment:

- Prevent costly replacements due to fires (transformers, property damage, etc.)
- No fire mitigation or deluge systems required
- Exceptionally high fire and flash points of 360°C and 330°C, respectively
- Highest ignition resistance of any high fire point dielectric fluid available
- FR3 fluid is FM Global Approved and Underwriters Laboratories classified as a Less-Flammable Dielectric Liquid.

Trusted worldwide for both new transformers and retrofilling existing transformers

Some of the largest utilities and transformer manufacturers around the world trust Envirotemp FR3 fluid. You will find FR3 fluid in power and distribution transformers of all sizes and applications through 420kV.

Improve performance

- Uses up to 15% less fluid and up to 3% less construction materials
- Increases loadability up to 20%
- Increases reliability
- Twice the fire and flash point as mineral oil significantly increases fire safety for workers and the community

Gain cost efficiencies

- Slows asset replacement
- Reduces routine maintenance
- No need for fire mitigation systems
- Potentially reduces insurance premiums due to increased fire safety
- Minimize need for concrete basins
- Supports supply chain sustainability
- Optimizes inventory management

Take advantage of environmental benefits

- Ultimately biodegradeable and non-toxic makes spill remediation easier and faster
- Carbon neutral
- Made from renewable vegetable oil

Envirotemp™ FR3™ fluid properties: standard acceptance values and typical values

	Standard Test Methods		ASTM D6871	IEC 62770	Envirotemp FR3 Fluid
Property	**ASTM**	**ISO/IEC**	**As-Received New Fluid Property Requirements**	**Unused New Fluid Property Requirements**	**Typical**
Physical					
Color	D1500	ISO 2211	≤1.0		0.5
Flash Point PMCC (°C)	D93	ISO 2719		≥250	255
Flash Point COC (°C)	D92	ISO 2592	≥275		320 – 330
Fire Point (°C)	D92	ISO 2592	≥300	>300	350 – 360
Pour Point (°C)	D97	ISO 3016	≤-10	≤-10	-18 – -23
Density at 20°C (g/cm³)		ISO 3675		≤1.0	0.92
Relative Density (Specific Gravity) 15°C/15°C	D1298		≤0.96		0.92
Viscosity (mm²/sec)	D445	ISO 3104			
100°C			≤15	≤15	7.7 – 8.3
40°C			≤50	≤50	32 – 34
0°C			≤500		190
Visual Examination	D1524	IEC 61099 9.2	bright and clear	clear, free from sediment and suspended matter	clear, light green
Biodegradation		OECD 301	readily biodegradable	readily biodegradable	ultimately biodegradable
Electrical					
Dielectric Breakdown (kV)	D877		≥30		47
Dielectric Breakdown (kV)					
1mm gap	D1816		≥20		28
2mm gap	D1816		≥35		48 – 75
2.5mm gap		IEC 60156		≥35	73
Gassing Tendency (mm/min)	D2300		≤0		-79
Dissipation Factor					
25°C (%)	D924		≤0.20		0.010 – 0.15
90°C (tan δ)		IEC 60247		≤0.05	0.02
100°C (%)	D924		≤4.0		0.41 – 3.85
Chemical					
Corrosive Sulfur	D1275	IEC 62697	non-corrosive	non-corrosive	non-corrosive
Water Content (mg/kg)	D1533	IEC 60814	≤200	≤200	4 – 50
Acid Number (mg KOH/g)	D974	IEC 62021.3	≤0.06	≤0.06	0.013 – 0.042
PCB Content (mg/kg)	D4059		not detectable	free from PCBs	not detectable
Oxidation Stability (48 hrs, 120°C)		IEC 61125C			
Total Acidity (mg KOH/g)		IEC 62021.3		≤0.6	0.1
Viscosity at 40°C (mm²/sec)		ISO 3104		≤30% increase over initial	17.1
Dissipation Factor at 90°C (tan δ)		IEC 60247		≤0.5	0.1

NOTE: Specifications should be written referencing only the defined ASTM or IEC industry standard acceptance values and test methods. The listed 'typical' values are average values summarized from a significant number of data points over many years; they are not to be identified as acceptance values.

ASTM D6871 Standard Specification for Natural (Vegetable Oil) Ester Fluids Used in Electrical Apparatus
IEC 62770: Fluids for electrotechnical applications – Unused natural esters liquids for transformers and similar electrical equipment.

Unit Life vs. Hottest Spot Temperature

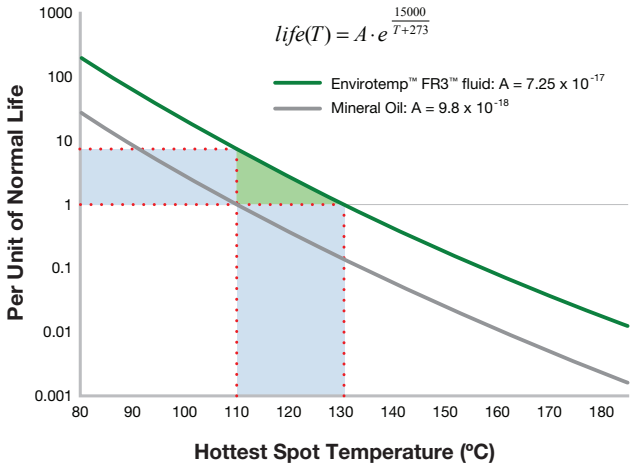

Optimize Transformer Performance, Reduce Operating & Maintenance Costs

FR3 fluid gives utilities the ability to increase overload capacity up to 20% or extend asset life. This results in significant cost savings over the life of each transformer.

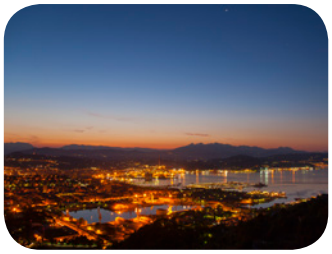

envirotemp™
ester dielectric fluids

contact us - envirotempfluids.com

US
Cargill Industrial Specialties
PO Box 5700
Minneapolis, MN 55443
USA
+1 800 842 3631
NAenvirotemp@cargill.com

India
Cargill India Pvt Ltd
14th Floor, Building 9A
DLF Cyber City, Phase III
Gurgaon 122 002, Haryana
India
+91 124 4090489
Indiaenvirotemp@cargill.com

Brazil
Cargill Especialidades Industriales
Avenida Morumbi 8234
04703-002
São Paulo, SP
Brasil
+55 11 98124 0065
SAenvirotemp@cargill.com

Turkey
Cargill Industrial Turkey
Baglarbasi, Kisikli Cad. Sarkuysan Ak
İs Merkezi No:4 A Blok 8-9-10-11
34662, Uskudar – Istanbul
Turkey
+90 0216 554 1915

Europe
Cargill Industrial Specialties - Cargill B.V.
Evert van de Beekstraat 378
1118 CZ Schiphol
The Netherlands
+31 20 500 6695
EMEAenvirotemp@cargill.com

Asia/Australia
Cargill Industrial Specialties
Level 22, Menara TM
Off Jalan Pantai Baru
59200 Kuala Lumpur, Malaysia
+603-2246-3111
AAenvirotemp@cargill.com

The information presented herein is believed to be true and accurate. However, all statements, recommendations and suggestions are made without guarantee, express or implied, and are subject to change without notice. WE DISCLAIM ALL WARRANTIES, EXPRESS OR IMPLIED, INCLUDING WITHOUT LIMITATION THE IMPLIED WARRANTIES OF MERCHANTABILITY, FITNESS FOR A PARTICULAR PURPOSE and FREEDOM FROM INFRINGEMENT and disclaim all liability in connection with the use of the products or information contained herein. All such risks are assumed by the equipment manufacturer/user and the final determination of suitability of each use application is the responsibility of the equipment manufacturer/user. Products may present unknown hazards and should be used with caution. Although certain hazards are described herein, we do not guarantee that these are the only hazards that exist.

© 2014, Cargill, Incorporated. All rights reserved.

B300v2 (2/14)

Cargill®

Envirotemp™ FR3™ Fluid

Reference Data

R2020

Envirotemp™ FR3™ Fluid Behavior in Cold Temperature Environments

INTRODUCTION

Dielectric fluids perform two important tasks in the operation of transformers: acting as an electrical insulator, and transferring heat from the core and coils to the tank walls and radiators. Transformers require a dielectric fluid that will perform these functions even in very cold conditions. Envirotemp™ FR3™ fluid at temperatures well below its pour point still removes the heat from the core and coils and maintains adequate dielectric strength.

POUR POINT

Pour point is defined as the lowest temperature at which a fluid is observed to flow under specified conditions (ASTM D97 is a commonly used test method). Conventional transformer mineral oils have pour points below -40 °C (-40 °F), lower than pour points of natural ester dielectric fluids.

The pour point of Envirotemp FR3 fluid is approximately -21 °C (-6 °F). However, this pour point temperature should not be considered a limiting factor when choosing a dielectric fluid for use in cold environments. For natural esters like Envirotemp FR3 fluid, cold temperature performance is not strictly related to flow, but is also a function of its ability to transfer heat from the coils to the fluid via thermal conduction and then initiate convection.

HEAT TRANSFER

Unlike water, most dielectric fluids do not have a well-defined solid/liquid phase transition temperature. During extended exposure to very cold temperatures, dielectric fluids do not change immediately from liquid to solid, but instead begin to thicken, and with time, gel (See Figure 1).

When increasing viscosity inhibits the ability of dielectric fluids to flow, the fluids lose their ability to convectively transfer heat. Fluids in such a state are perceived as an inadequate heat transfer means, possibly resulting in transformer overheating.

However, Cargill knows of no published case histories proving that transformers suffer thermal runaway due to cold fluid.

Furthermore, a paper presented at the October 1999 IEEE CEIDP conference summarizes a series of full load cold start tests performed to determine the temperatures of transformer coils when Envirotemp FR3 fluid is below its pour point temperature. Distribution transformers instrumented to measure core, coil, and oil temperatures were energized at full rated load at -30 °C (-22 °F). The units showed no abnormal temperature excursions and remained well below the temperature limits given in IEEE standards.[1]

These tests confirm that Envirotemp FR3 fluid transferred heat from the energized coils to the core and colder fluid, absorbing and conducting the heat away from the coils. As the fluid warmed, convective cooling was established in the area immediately around the core-coil assembly, heating the surrounding fluid. Temperatures stayed well below the normal hottest spot temperature limit for 65 K rise transformers. This was true even though radiators were necessary to meet the winding temperature limits given in the IEEE loading guide[2] at normal heat run ambient temperatures.

Based on these and other test results, Cargill recommends cold starting Envirotemp FR3 fluid-filled transformers at any temperature, provided that physical operation of liquid immersed components is not required below their published low temperature limits (in Envirotemp FR3 fluid).

MOVEMENT OF LIQUID IMMERSED COMPONENTS

Dielectric coolants increase in viscosity as their temperatures decrease. When exposed to prolonged

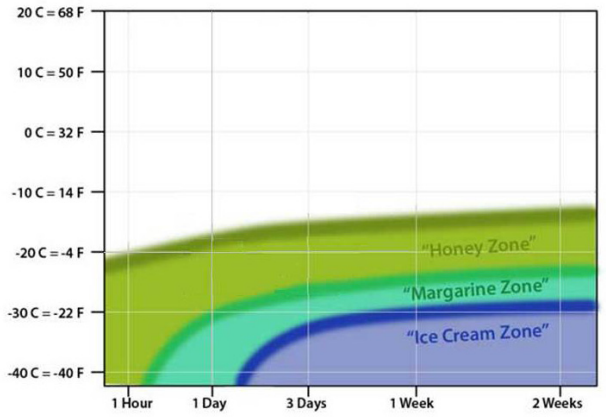

Figure 1.
Envirotemp™ FR3™ fluid consistency at low temperature

[1] K.J. Rapp, G.A. Gauger, J. Luksich, "Behavior of Ester Dielectric Fluids Near the Pour Point", IEEE Conference on Electrical Insulation and Dielectric Phenomena, October 17-20, 1999, Austin, TX

[2] IEEE Standard C57.91 "IEEE Guide for Loading Mineral Oil Immersed Transformers", Institute of Electrical and Electronics Engineers Inc, New York

temperatures below their pour point, the higher viscosity can potentially restrict the operation of transformer accessories. For example, high viscosity fluids might hamper mechanical movement of liquid immersed components (switches, etc.), and may extinguish arcs more slowly. These are two of the factors that led the ANSI/IEEE Transformer Standards Committee to state in C57.12.00 that top oil temperatures below -20 °C are not considered as usual service conditions.

In order to determine the temperature at which Envirotemp FR3 fluid impacts moveable components, one transformer manufacturer exposed a small transformer, a 10KVA single phase pole mount transformer containing approximately 15 gallons of fluid, to -25 °C temperature continuously for eleven days. The viscosity of Envirotemp FR3 fluid did not interfere with the operation of mechanical devices, and no voids were formed, indicating flow still occurred.

TEMPERATURE ANALYSIS

Transformers, due to their large mass and thermal time constant, require several hours or days to reach equilibrium with ambient temperatures. This is the case even when de-energized. As a result, daily low temperatures (those reported during the evening news) do not reflect the true transformer temperature. Daily average temperature (hourly temperatures averaged over 24 hours) is a more realistic measure of operating conditions.

The US National Oceanic and Atmospheric Administration has many years of temperature data (readings taken at the nation's weather stations on an hourly basis, and used to report daily weather conditions). Two noteworthy conclusions can be drawn from the data:

1. Daily average temperatures are not as extreme as daily low temperatures reported by local weather people, due to daily cyclical heating.
2. Less than 1% of the contiguous US, and less than 0.1% of installed transformers experience average daily temperatures of -25 °C for prolonged periods of time (longer than 3 days)

It is important to recognize that, for in-service distribution transformers, the temperature of fluid is significantly higher than the ambient temperature. Even no-load losses are typically enough to keep the fluid flowing in transformers exposed to continuous temperature of -30 °C.

As reported in the 1999 IEEE CEIDP paper, cold exposure tests confirm that Envirotemp FR3 fluid in transformers can require exposure times of days to reach equilibrium with its ambient. Consult your transformer or component equipment suppliers to obtain their low temperature component verifications and recommended transformer starting procedures for fluid temperatures below -20 °C.

More than 450,000 transformers filled with Envirotemp FR3 fluid are in service, including installations In Norway (30,000+ transformers) and Canada (15,000+ transformers). There have been no cold ambient transformer start-up or energized operation problems reported to Cargill.

FLUID DIELECTRIC STRENGTH

A transformer fluid must also perform as an electrical insulation medium. Tests confirm that Envirotemp FR3 fluid maintains its dielectric strength to at least –50 °C (-58 °F).

Various factors impact a fluid's dielectric strength, but typically the most common and important contaminant is water. For all dielectric fluids, the dielectric strength decreases as water content increases.

Water moves between solid insulation and dielectric fluid trying to reach relative humidity equilibrium. In transformers, the paper insulation holds much more water than the dielectric fluid.

Figure 2 shows how temperature affects the fluid's saturation point (the point where the fluid cannot hold any more water). The hotter a transformer operates, the more moisture migrates from paper into fluid. The fluid can absorb more moisture driven off the paper due to significant increase in its saturation point as temperature increases. Additionally the hotter a transformer operates, the faster the insulation paper ages, producing more moisture. This water migration continues until both the paper and fluid are at relative saturation equilibrium at the current temperature.

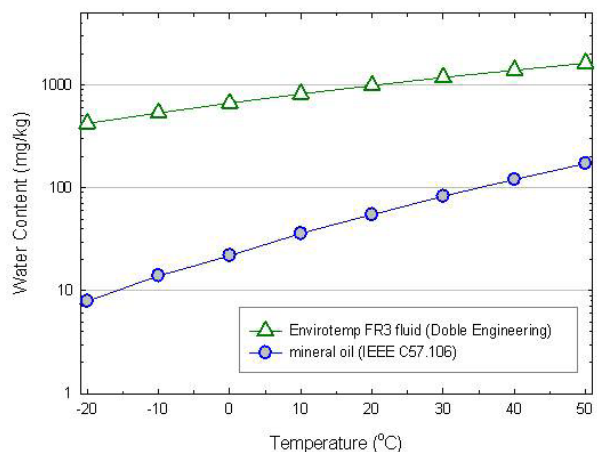

Figure 2.
Saturation points at low temperature

Water in excess of the saturation point is 'free' water. At 25 °C mineral oil saturates at about 70 mg/kg and Envirotemp FR3 fluid at about 1000 mg/kg. However, at -20 °C, mineral oil saturates at about 8 mg/kg, while Envirotemp FR3 fluid saturates at about 425 mg/kg. Therefore, Envirotemp FR3 fluid is not likely to reach saturation in cold ambient conditions. This helps prevent the formation of free water, significantly reducing the risk of transformer failure due to low dielectric strength during cold start up.

SPECIAL CONSIDERATIONS

Sampling the Fluid

In colder climates, it is normal for a small volume of Envirotemp FR3 fluid in the drainpipe and valve to be at ambient temperature, even though the transformer may have been in service during or just prior to sampling. Because the sampling valve (typically located at the lowest point of the transformer temperature gradient) contains a small volume of isolated fluid, and the valve metal "transmits" the cold, the probability of gelled fluid in the valve is much higher than in the main tank. In these cases, the service pipe and drain valve should be warmed until the fluid flows. Cargill recommends following the procedures given in ASTM D923 Standard Practices for Sampling Electrical Insulating Liquids.

On-Load-Tap-Changers (OLTC) & Voltage Regulators

For new applications contact the OLTC or regulator manufacturer to verify compatibility and operational limits. Where design and climate data warrant it, Voltage regulators filled with Envirotemp FR3 fluid are equipped with a low temperature relay to lock out the automatic control when the fluid temperature is below -10 °C.

Forced Fluid Flow (Pumps)

Contact the pump manufacturer to verify the pump's operational limits with Envirotemp FR3 fluid. Care should be exercised when energizing pumps when the fluid temperature is below the pump manufacturer's low temperature limit for Envirotemp FR3 fluid. Figure 3 shows viscosity versus temperature for Envirotemp FR3 fluid.

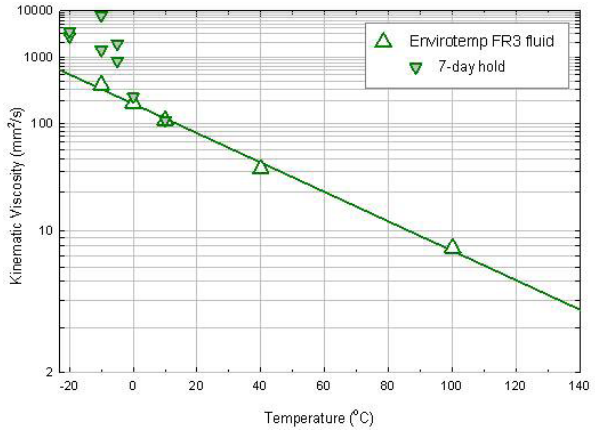

Figure 3.
Viscosity versus temperature

© 2013 Cargill, Incorporated. Envirotemp™ and FR3™ are valuable trademarks of Cargill Incorporated.

Electrical and Electronics Engineers, Inc., (IEEE). This product is not endorsed or approved by the IEEE.

IEEE® is a registered trademark of the Institute of Electrical and Electronics Engineers, Inc., (IEEE). This publication is not endorsed or approved by the IEEE.

9350 Excelsior Crossing Blvd
Hopkins, MN 55343 USA
www.cargill.com/fr3fluid

Substation

Small Power Transformers

750 kVA Through 20,000 kVA

Through 69 kV Primary Voltage

Through 34.5 kV Secondary Voltage

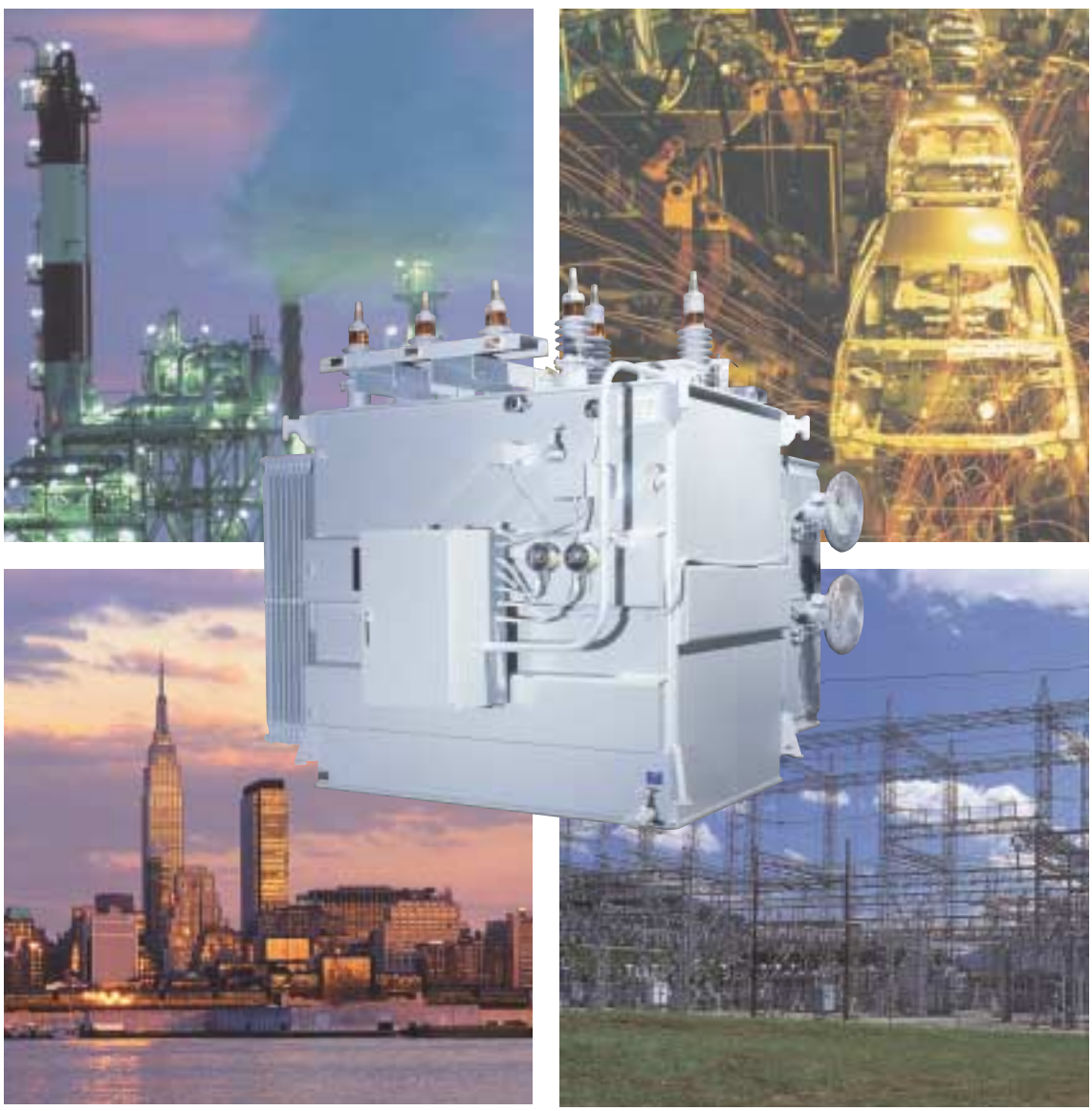

The ABB Substation Transformer is built to withstand the extremes encountered during shipping, installation, and short circuit —without sacrificing performance.

ABB's Substation Transformer delivers unrivaled total performance in a rugged, compact package.

ABB Substation Transformers utilize a rectangular core and coil design that is a distinguishing characteristic of ABB small power liquid filled transformers. This proven design provides excellent mechanical strength, dependability, and space-saving economy needed for utility, industrial, and commercial applications.

With most ratings, a choice of fluids including mineral oil, silicone, R-Temp®, and BIOTEMP® is offered. Mineral oil is typically specified for outdoor applications. When flammability is a concern, Silicone or R-Temp are generally used. BIOTEMP is used anywhere any insulating fluid spill could require expensive clean-up procedures.

Product Scope:
- 750 kVA-20,000 kVA
- Primary Voltages: Through 69 kV
- Secondary Voltages: Through 34.5 kV

Available Fluids:
- Mineral Oil
- Silicone
- R-Temp®
- BIOTEMP®

Substation Benefits/Advantages:
- Rectangular core/coil design
  — Minimal size: space saving
  — Minimal weight: energy saving
- Insuldur® layer insulation system for thermal upgrade and mechanical strength
- DuraBIL® turn insulation—superior adhesion, abrasion resistance, and thermal stability
- High efficiency with the best combination of initial cost and low operating cost
- Sealedaire® preservation system—sealed gas blanket over fluid in tank

Substation Transformers feature cover-mounted primary and secondary bushings and can be provided with load (LTC) changers.

Quality Products...Built With Pride

As a single-source supplier, ABB is the largest and most complete manufacturer of power transmission and distribution equipment in the world. We make certain that our world renowned quality is exemplified by every product that bears our name. An experienced and dedicated work force ensures the quality of our work and your satisfaction with our products. We strive for operational excellence, lowest manufacturing cost, and short cycle times.

ABB's mission is to be the leader in delivering quality products and services for power generation, transmission and distribution, industrial processes, mass transit, and environmental control that meet the needs and requirements of our customers and contribute to their success.

To ensure customer satisfaction ABB will provide value-added, integrated solutions that are driven by superior technology and performance.

ABB's employees are committed to leadership standards in applying the Company's unique combination of experience and global resources to meet societal goals for sustainable growth and clean energy.

The evolution of ABB's rectangular core and coil design

The basic configuration of a transformer core was originally circular, due to the natural shape suggested by a coil. As space and material considerations became more critical, engineers explored more efficient methods for transformer design. The greatest incentive for change came from the excessive cost of vault space in larger cities.

In 1954, after more than a decade of research and development, the first rectangular core and coil was placed into commercial service. Service records starting then and up through today have shown the overall superiority of the rectangular core and coil design for conserving space and materials. Just as importantly, the rectangular core and coil has an outstanding record for reliability, strength, and efficiency. This has been demonstrated through successful short circuit tests, as defined by ANSI standards, in addition to thousands of service years in the field.

ABB has continued development and testing of the rectangular core and coil design. Advanced materials and state-of-the-art manufacturing techniques currently allow ABB to offer ratings through 20,000 kVA and 69 kV.

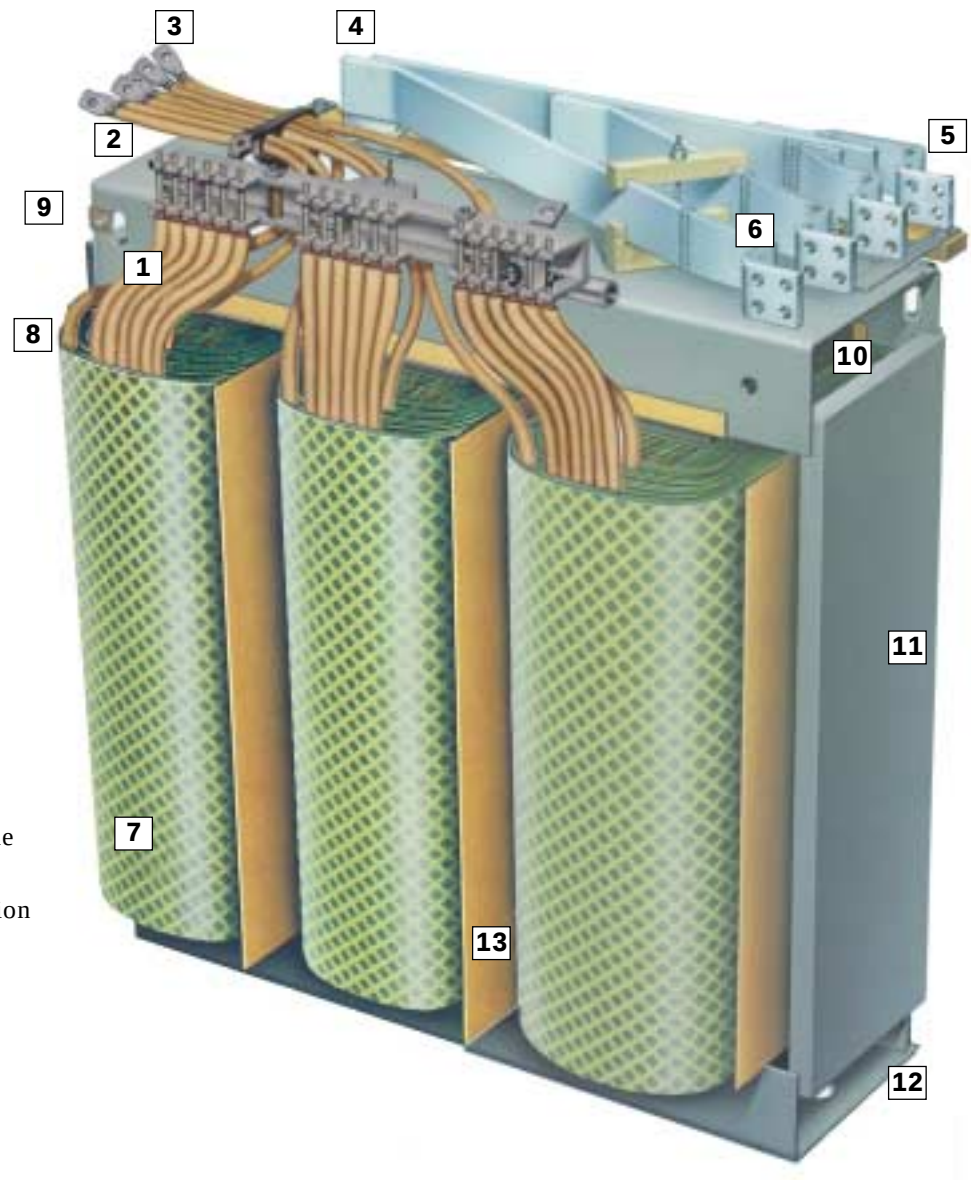

1. Tap Leads
2. Tap Changer
3. High Voltage Leads
4. Low Voltage Bus
5. Low Voltage Bushing Connection
6. Flexible Bus
7. Phase Coil
8. High Voltage Lead
9. Core Ground (Removable)
10. Step-Lap Core
11. Side Braces and Support Tie
12. Bottom Support
13. Inner Phase Barrier Insulation

ABB's rectangular design offers excellent mechanical strength that has been proven through years of service and in special testing.

The mechanical strength is achieved through the use of a unique six-piece supporting structure. This supporting structure is assembled in a pressure jig around the core and coils and arc welded to form a rigid structure.

The top and bottom pieces exert a clamping action on the yokes of the core to hold the laminations firmly in place and more importantly, to achieve optimum sound attenuation by using a precalculated pressure. Welding holds this preload for a permanently quiet core.

Steel end plates are pressed into position and welded to the top and bottom pieces to form a permanent framing. The thickness of the end plate is calculated for each design. The end plate's calculated thickness provides the beam strength required to minimize the tendency of the wide, flat part of the outside coils to "round out" during fault conditions.

The Core

The rectangular core is a series of laminations made from high-quality, grain-oriented silicon steel.

The stacked core provides a superior flux path by utilizing a step-lap mitered core joint. The effective way in which the core is supported, as well as the efficient step-lap joint, have resulted in: decreases in exciting current up to 40%; reductions in sound levels up to 3 db; and reductions in no load loss up to 10%.

The rectangular-shaped core efficiently fills the corresponding shaped opening in the coil with a minimum of unused space. The short yoke between the core legs reduces the external path of the flux between active core leg material, resulting in an increase in efficiency. The rectangular shape of the core allows for more uniform and rigid support which prevents the shift of laminations and improves sound level characteristics.

Step-lap mitered core joints are utilized for efficiency and noise reduction.

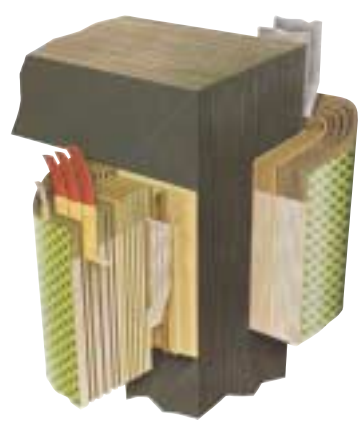

The core efficiently fills the similar shape opening in the coil to minimize unused space.

The Coil

ABB coils feature aluminum or copper conductors in both high and low voltage windings. The low voltage winding is accomplished on a constant tension machine and consists of a full-width or part-coil sheet conductor extending the full height of the coil.

The advantage of the low voltage sheet is a continuous cross section of conductor that allow the electrical centers of high and low voltage windings to easily align themselves, virtually eliminating the vertical component of short circuit force.

The high voltage windings use wire conductors and are wound directly over the low voltage winding on a constant tension traversing machine. The high voltage conductors are typically insulated with ABB's exclusive DuraBIL® turn insulation.

DuraBIL turn insulation

Turn Insulation

Traditional crepe paper or NOMEX tape is used in some design considerations. However, DuraBIL, which is a tough, flexible and inert turn insulation, is used in most designs. It

reduces the most prevalent cause of transformer failure: deterioration of turn insulation.

DuraBIL is a single layer of epoxy powder deposited electrostatically and baked on the wire conductor. The process is closely controlled and monitored to insure a continuous, uniform coating. The result is a compact turn insulation with superior characteristics, including: adhesion; flexibility; abrasion resistance; and thermal and chemical stability.

DuraBIL will not degrade and contaminate the transformer fluid with moisture. Beyond the chemical attributes, DuraBIL maintains dimensional stability and the coil's structural integrity.

Insuldur® Insulation

Insuldur insulation thermally upgraded kraft paper is typically used for layer and high to low insulation.

The Insuldur system of chemical stabilizers thermally upgrades cellulose insulating materials to permit a 12% higher load capacity. Insuldur can be used with all fluids offered with ABB small power transformers.

Chemical stabilizers retard insulation breakdown under elevated temperature conditions. Additionally, dimensional changes in the insulating materials are minimized to insure a tighter structure. The result is greater strength and coil integrity throughout the life of the transformer.

The Insuldur system allows a unit rated at 55˚C rise to be operated at a 10˚C higher temperature, with a 12% increase in kVA capacity. Generous oil ducts extend the height of the coil to provide cooling in the winding. The staggered, diamond epoxy bonds help assure free oil flow through the winding.

Coil Construction

The Insuldur layer insulation is coated with a diamond pattern of B-stage epoxy adhesive, which cures during processing to form a high-strength bond. This bond restrains the windings from shifting during operation or under short circuit stresses. The high-to-low insulation is placed over the low voltage winding and the wire-wound high voltage is wound directly over the low voltage, forming a high-strength coil assembly.

Accurately-located taps and a large winding cross section keep unbalanced ampere turns to a minimum. Unbalanced ampere turns create forces during short circuit that drive the high voltage and low voltage coils apart vertically. By minimizing this imbalance, vertical forces are correspondingly reduced and the design is stronger under short circuit stresses.

After tanks are cleaned and phosphatized, the exterior is coated with waterborne alkyd paint using a unique flow-coat process for complete and thorough coverage of paint.

The large areas presented by the layer-type winding result in a low ground capacitance, which gives a nearly straight line surge distribution throughout the winding. A compact, high-impulse-strength coil is the result.

Tank surface preparation is accomplished using a state-of-the-art shot blast facility.

Tank Construction

The transformer tank is designed to withstand a pressure 25% greater than the maximum operating pressure. The carbon-steel plate used to form the tank is reinforced with external side wall braces, and tank seams are continuously welded.

Each cooler assembly is individually welded and receives a pressurized check for leaks prior to assembly on the tank. After the coolers are attached to the tank, the completed tank assembly is leak-tested before shipment.

MicaFil low frequency heating chamber

Effectively removing the moisture from the cellulose insulation is a key process in transformer manufacturing. The quality of the drying of the insulating material is critical in meeting dielectric requirements and assuring trouble-free service for users. MicaFil low frequency heating is a state-of-the-art process for drying transformers.

MicaFil low frequency heating insulation drying process

- The insulation is dried in its own tank and is never exposed to the atmosphere once it dries.
- The windings are heated uniformly, so the insulation deep in the coils reaches a temperature that promotes moisture removal during the vacuum cycle.
- The moisture level of the air in the vacuum exhaust is monitored constantly to ensure that the insulation is dry when the process is completed.
- The drying process cycle time is reduced by up to 60% less than the oven and vacuum methods.

Fluid Preservation Systems

Sealed Tank

The Sealed Tank system is basic to all ABB network transformers. The tank is filled under vacuum and sealed so that throughout a top-oil temperature range of -5˚C to +105˚C, the gas-plus-oil volume will remain constant within limits defined by standards.

Sealedaire® Standard on units >2500 kVA or ≥250 kV BIL

The Sealedaire preservation system uses a sealed gas space above the fluid which prevents breathing under normal conditions. An automatic pressure-vacuum relief valve assembly is factory-set to keep internal pressure within the limits of 6.5 pounds per square inch pressure or vacuum.

MicaFil low frequency heating is a state-of-the-art process for drying transformers.

Intertaire® Optional

The Intertaire Fluid Preservation System prevents oxygen and moisture from being drawn into the transformer tank when vacuum conditions exist. This system consists of a nitrogen cylinder and necessary controls to maintain positive nitrogen pressure in the gas space.

Conservator Optional

The Conservator, or Expansion-Tank System, seals the fluid from the atmosphere in the main tank by using an auxiliary tank partially filled with transformer fluid and connected to the main tank by piping. The system allows the transformer tank to remain full, despite expansion or contraction of the fluid due to temperature changes.

Transformer Fluids

Mineral Oil

Mineral oil is primarily used in outdoor applications.

ABB offers transformers designed with less flammable fluids—silicone, R-Temp®, and BIOTEMP®—that can be used to meet National Electric Code 450-23 for indoor applications.

Silicone

Silicone is a less flammable dielectric coolant for transformer applications and features heat stability, material compatibility, low flammability, and low toxicity. Silicone's high fire point of 340˚C qualifies it as a less flammable fluid, which is U.L. Listed and Factory Mutual Approved for indoor and outdoor use. It's a good choice in areas where potential fire hazards exist and special fire-suppressant systems are installed.

R-Temp®

R-Temp fluid is classified as less flammable and is available when flammability is a concern. R-Temp fluid is Factory Mutual Approved and U.L. Listed for indoor and outdoor use.

BIOTEMP®

BIOTEMP is a fully biodegradable, environmentally-friendly dielectric fluid. In a 21-day period, BIOTEMP has been tested to be 97% biodegradable. BIOTEMP is Factory Mutual Approved and U.L. Listed. BIOTEMP is suitable for application indoors and in areas of heightened environmental sensitivity where any insulating fluid spill could require expensive clean-up procedures.

Quality Assurance

The following tests are made on all transformers unless noted as an exception. The numbers shown do not necessarily indicate the sequence in which the tests will be made. All tests will be made in accordance with the latest revision of ANSI C57.12.90 Test Code for Transformers.

1. Resistance measurements of all windings on the rated tap and on the tap extremes on one unit of a given rating on a multiple unit order
2. Ratio Tests on the rated voltage connection and all tap connections
3. Polarity and Phase-relation Tests
4. No-load loss at rated voltage
5. Excitation current at rated voltage
6. Impedance and load loss at rated current on the rated voltage connection of each unit and on the tap extremes on one unit of a given rating on a multiple unit order
7. Applied Potential Tests
8. Induced Potential Test
9. Mechanical Leak Test.

Optional tests

The following additional tests can be made on any substation transformer. All tests are made in accordance with the latest revision of ANSI Standard Test Code C57.12.90.

1. ANSI Impulse Test
2. Quality Control Impulse Test
3. ANSI Front-of-Wave Impulse Test
4. Temperature Test
5. Sound Test
6. Octave Band Sound Test
7. Insulation Resistance (Meggar) Test
8. Corona (Partial Discharge) or Radio Influence Voltage (RIV) Tests
9. Short Circuit Test
10. Short Circuit Capability Calculations in lieu of Short Circuit Test
11. Insulation Power Factor Test
12. Zero-Phase Sequence Impedance Test
13. Seismic Test
14. Quality Assurance Documentation
15. Witness or Inspection.

ABB's quality assurance begins with contract negotiations and continues through design, control of purchased materials, manufacturing and test, and is not complete until the transformer is installed and operating successfully in the customer's application for many years.

Substation transformers have successfully passed ANSI Short Circuit Tests.

Substation transformers are manufactured in an ISO 9001 Certified factory.

Standards Compliance

ANSI C57.12.00
ANSI C57.12.90
ISO 9001
CSA - C88
Factory Mutual Labeling Available
UL Labeling Available

Specifications

Self-Cooled Power Rating (kVA)	Primary Voltage (kV)	Secondary Voltage (kV)	Available Fluids	Load Tap Changers
750-20,000	Up through 69	Up to 34.5	Oil, Silicone, R-Temp®, BIOTEMP®	2500 kVA and larger

Three Phase, 60 HZ, Oil, 65 C, HV 15kV, LV 5 kV			Dimensions		
kVA Rating	Weight (lbs.)	Gallons Liquid	H	W	D
750	5700	140	85	54	66
1000	5900	150	85	54	67
1500	7300	175	85	55	83
2000	8700	210	85	60	88
2500	10,100	230	85	105	88
3750	14,200	375	87	123	88
5000	17,300	510	94	152	94
7500	29,000	875	108	163	108
10,000	34,500	1055	118	168	109
12,000	42,000	1350	138	170	122
15,000	60,000	1500	140	170	128
20,000	80,000	2000	144	180	136

Values listed are typical and should not be used for construction purposes.

Standard Electrical Features

- 2 Windings, without reconnectable windings
- Four high voltage winding full-capacity taps with a total tap range of 10%
- Frequency of 60 Hertz
- Standard impedance as shown in chart
- Sound levels as shown in chart
- Standard BIL levels as shown in chart
- Excitation limits defined by ANSI C57.12.00-1980:
  - Unit will deliver rated kVA at 5% above rated secondary voltage without exceeding the limiting temperature rise provided the load power factor is 80% or higher and the frequency is at least 95% of rated value
  - Unit can be energized at 10% above rated secondary voltage at no-load without exceeding the limiting temperature rise
- 65˚C average temperature rise

Optional Electrical Features

- Series multiple windings
- Delta-wye connection—changing the internal connections on the HV or LV windings (three phase only)
- Nonstandard HV taps and tap range
- Nonstandard phase relationship
- Low-loss, high efficiency designs
- Frequency other than 60 Hertz
- Special impedances
- Design to withstand ANSI front-of-wave impulse test
- Special sound level
- Special BIL level
- Over excitation
- 55˚/65˚C average temperature rise
- Special ambient temperatures
- Operation at altitudes above 3300 feet
- Motor-starting duty or dedicated motor loads

Standard Electro-Mechanical Features

- Aluminum windings
- Tap changer for de-energized operation with the handle brought out through the tank wall
- Rubber-jacketed multi-conductor control wiring

Optional Electro-Mechanical Features

- Copper windings
- Tap changer mechanical key interlock
- Provisions only for tap changer mechanical key interlock
- Flexible conduit for control wiring
- Rigid conduit for control wiring
- Special control wiring size or insulation
- Core ground lead brought to test point located inside tank adjacent to bolted handhole
- Electrostatic shields
- Internally-mounted bushing current transformer

Specifications

Standard Tank Features
Corrosion-resistant steel hardware
Lifting hooks for complete unit
Lifting loops for tank cover
Welded main tank cover
Welded handhole on cover, or bolted handhole when access to tank interior is required
Tank grounding provisions
Transformer base which permits rolling in directions parallel to the base center line

Optional Tank Features
Special hardware
Bolted handhole
Ground connector and pad, clamp-type only
Skid mounting

Standard Gauges and Fittings
Magnetic liquid-level gauge (no alarm contacts)
Dial-type thermometer (no alarm contacts)
Pressure-vacuum bleeder device
Pressure-vacuum gauge: Units rated above 200 kV BIL Units rated above 2500 kVA
Pressure-relief device (no alarm contacts): — Units rated above 200 kV or 2500 kVA
Top filter press connection—threaded cap on units rated 2500 kVA and below
Top filter press connection—valve on units rated above 2500 kVA
Drain valve and bottom filter press connection combined in a lower valve

Optional Gauges and Fittings
Magnetic liquid-level gauge with alarm contacts
Dial-type thermometer with alarm contacts
Pressure-vacuum gauge: Units rated 200 kV BIL and below Units rated 2500 kVA and below
Pressure-vacuum gauge with alarm contacts
Pressure-relief device (no alarm contacts): — Silicone filled — Oil filled
Pressure-relief device with alarm contacts
Rapid pressure rise relay
Dial hot-spot indicator
Shock indicator for shipment
Audible alarm
RTD coil for use with remote temperature indicator
Padlockable drain valve

Standard Cooling System
Tank Design Pressure: — Per ANSI C57.12.10
Fluid Preservation System: Sealed tank Sealedaire on units >2500 kVA or ≥250 kV BIL
Coolers: — Flat tubular coolers welded to tank
Self-cooled (OA)

Optional Cooling System
Tank Design pressure: — 15 psig
Fluid Preservation System: Intertaire® Conservator
Coolers: — Removable coolers — Panel coolers — Oil-Water Heat Exchanger (OW coolers)
Provisions only for future fans (FFA)
Complete forced air cooling systems (FA) — 15% Added capacity units rated ≤ 2500 kVA — 25% Added capacity units rated > 2500 kVA & ≤ 10,000 kVA — 33% Added capacity units rated > 10,000 kVA
Control power transformer for fan power source or auxiliary service

Specifications

Standard Tank Finish
Paint color: — ANSI 61, light grey — ANSI 70, sky grey
Paint system process: — Standard system: waterborne alkyd primer and intermediate coat, oven cure, air dry alkyd enamel spray finish coat, ambient cure, 3 mils minimum

Optional Tank Finish
Special paint color
Paint system process: — Standard System—5 mils total thickness — System I system: zinc chromate epoxy primer and intermediate coat, oven cure, air spray aliaphatic polyurethane, ambient cure, 5-7 mils — System II: zinc-rich primer, epoxy coat, oven cure and air dry, 7 mils min. (only available with panel coolers)
Tank undercoating

Standard High & Low Voltage Components
Bushings: Cover-mounted porcelain with copper conductor

Optional High & Low Voltage Components
Bushings: — Special cover-mounted porcelain bushings — Extra Creep bushings — Transformer-Breaker-Interchangeable (TBI) bushings
Bushing terminal connectors
Cover-mounted bus duct throat (HV only)
HV and LV surge arresters
External fuses (HV only)

Standard Sound Levels

Self-Cooled (OA) Equivalent Two-Winding (kVA)	NEMA Average DB-OA	NEMA Average DB-FA
501-700	57	67
701-1000	58	67
1001-1500	60	67
1501-2000	61	67
2001-2500	62	67
2501-3000	63	67
3001-4000	64	67
4001-5000	65	67
5001-6000	66	68
6001-7500	67	69
7501-10000	68	70
10001-12000	69	71
12001-15000	70	72
15001-20000	71	73

Standard Basic Impulse Levels

kV Class	Introduced Test 180 Hz-7200 cyc.	kV BIL	Applied Test 60 Hz-kV
1.2		45	10
2.5		60	15
5.0	Twice	75	19
8.7	Normal	95	26
15.0	Voltage	110	34
25.0 Grd Y Only		125	40
25.0		150	50
34.5 Grd Y Only		150	50
34.5		200	70
46.0		250	95
69.0		350	140

Standard Impedances (Percent)

HV kV BIL Class	Low Voltage Below 2400V	Low Voltage 2400V and above
45-150	5.75*	6.50**
200	7.25	7.00
250	7.25	7.50
350	. . .	8.00

* 6.75% is also available as an option.
** 5.50% is also available as an option.

Special Options
Operation in Hazardous Locations (Qualification of externally attached equipment such as wiring, conduit, fans, cabinets, alarm contacts, relays)
Receptacle or light in control cabinet
Space heater with thermostat in control cabinet
Reusable gaskets on bushings, handhole, devices
Special dimensions

Specification Guide

Quality Assurance

The manufacturer shall have specialized in the design, manufacture and assembly of liquid filled secondary substation transformers for a minimum of (25) years. The transformer manufacturer and location of manufacture and test are to be supplied at the time of quotation.

The test facility used to perform loss tests in accordance with ANSI C57.12.90 must be certified by an approved 3rd party to meet NBS 1204 standards for accuracy. Calibration of the equipment used for these loss measurements must be traceable to NIST or an approved equal 3rd party laboratory. Records of all equipment calibration shall be made available to the Buyer upon request.

The transformers shall be manufactured by a company which is certified to ISO 9001:1994, EN ISO 9001:1994; BS EN ISO 9001:1994; ANSI/ASQC Q9001: 1994 for design, manufacturing, and servicing of liquid filled small power transformers. A certificate of Compliance to this requirement shall be provided with the proposal.

Core

The core shall be constructed of high-grade, grain oriented, silicon steel laminations, with high magnetic permeability. Magnetic flux density is to be kept well below the saturation point. The core construction shall include step-lap mitered joints to keep core losses, excitation current and noise level to a minimum.

Windings

All windings and internal connections shall be (copper) (aluminum). The windings shall be tightly wound utilizing tension devices to place the conductor into the coils. For optimum dielectric and mechanical strength, a minimum of two sheets of epoxy coated thermally upgraded Insuldur® insulation shall be placed between each layer in the winding.

Sheet conductor shall be used in secondary winding to minimize vertical short circuit forces.

De-Energized Tap Changer

Four full capacity taps, 2 +/- 2.5%, shall be located in the high voltage windings. A manually operated de-energized tap changer shall be provided for changing the off circuit taps. The tap changer shall be capable of carrying the full transformer short-circuit current without damage or contact separation. The tap changer shall be gang operated from a single operating point and shall have an easily visible position indicator. The tap changer operating mechanism shall include provisions for pad locking in each tap position.

Tank Design

The transformer tank, cooling equipment and compartments subject to operating pressures shall be designed per ANSI C57.12.10. The maximum design withstand pressure shall be indicated on the nameplate.

Gaskets

The gaskets shall be compatible for the insulating fluid in the transformer tank. Gasket in contact with Silicone fluid or vapors shall be Viton material.

Bushings

High voltage and low voltage bushings shall be furnished. Bushings above 45 kV BIL rating shall be gray wet-process porcelain.

Insulating Fluid And Preservation System

The fluid preservation system shall be sealed air. The insulating fluid shall be (mineral oil) (BIO-TEMP®) (Silicone fluid) (R-TEMP®). The transformer insulating fluid shall be certified PCB free at the time of shipment and the tank shall be so labeled. The transformer insulating fluid shall meet or exceed the requirements of the appropriate ANSI and ASTM fluid Standards. The transformer fluid shall be tested for dielectric breakdown and moisture content just prior to the time of shipment.

Grounding Provisions

All non-energized metallic components of the transformer shall be grounded. Tank grounding provisions shall consist of two ground pads, welded to the base or to the tank wall near the base on diagonal corners. The ground pads shall be copper-faced or stainless steel with two holes spaced horizontally at 1.75-inch centers and tapped for 0.5 inch 13-UNC thread.

Sound Level

The substation transformer and auxiliary cooling equipment shall be designed and constructed to minimize the audible noise generated with the transformer energized at rated voltage and with all auxiliary cooling equipment in operation. The acceptable noise level shall be in accordance with NEMA TR 1. The measurement procedure shall be as specified in ANSI C57.12.90.

Nameplates

Transformer shall be furnished with a non-corrosive diagrammatic nameplate, permanently attached with non-corrosive hardware. The diagrammatic nameplate shall include the name of the manufacturer of the equipment as well as the location where the transformer was manufactured and tested.

Exterior Finish

The transformer exterior painting system shall be the manufacturers standard. However, as a minimum, the transformer shall be thoroughly cleaned and phosphatized, painted with at least one corrosion inhibiting primer and one finish coat to provide a minimum total dry-film thickness of not less than 3 mils.

The finish shall be (ANSI 70) (ANSI 61) (OTHER _____).

Testing

Each transformer shall receive all standard routine tests as required by ANSI C57.12.00 and performed as specified by ANSI C57.12.90.

A certified test report shall be submitted and shall contain the test data for each transformer serial number manufactured. The certified test report shall as a minimum contain the data as specified in ANSI C57.12.90.

Short Circuit withstand capability shall be verified by full short circuit tests on similar or larger units in accordance with the latest revision of ANSI C57.12.00 and ANSI C57.12.90. The maximum allowable variation in impedance measured on a per-phase basis after the test series shall not differ from that measured before the test series by more than 2% for category II and III equipment for circular or noncircular coils. Certified test reports from applicable short circuit tests shall be submitted to the purchaser, upon request, prior to shipment of the transformers.

Descriptive Bulletin 47-350 Revised 01/02 The Musselman Group, Roanoke, VA

ABB Inc.

Dry Type
State Rt. 42, P.O. Box 38
Bland, VA 24315
(276) 688-3325 Fax: (276) 688-4588

Liquid Filled
2135 Philpott Road
South Boston, VA 24592
(434) 575-7971 Fax: (434) 575-2208

www.abb.com/transformers

Systèmes FIREFLEX Inc. Systems

Project name:	Winnetka IL Transfos
Reference number:	ICAF- 1734
Calculated by:	Lorne Levesque
Date calculated:	2014/08/19

Maximum system capacity based on selected areas

Discharge time:	5.0 min
Waterflow:	333.2 USGpm
Air supply:	
Cylinders required:	6.5
Model:	11BC439
Foam type:	National Foam -Aer-O-Lite 3%
Foam required:	33.6 USG
2.00%:	33.6 USG

Nozzles

Type	Quantity
TAR225	56

Areas protected	Area	Maximum system capacity
1) TRF #1 Sides	900.00 sq. ft	Yes
2) TRF #1 Ends	225.00 sq. ft	Yes
3) TRF #2 Sides	900.00 sq. ft	Yes
4) TRF #2 Ends	225.00 sq. ft	Yes
5) TRF #3 Sides	900.00 sq. ft	Yes
6) TRF #3 Ends	900.00 sq. ft	Yes
7) TRF #4 Sides	900.00 sq. ft	Yes
8) TRF #4 Ends	225.00 sq. ft	Yes
9) Voltage Regulator	210.00 sq. ft	Yes
Total: 9	5385.00 sq. ft	9

Systèmes FIREFLEX Inc. Systems

Project name:	Winnetka IL Transfos
Reference number:	ICAF- 1734
Calculated by:	Lorne Levesque
Date calculated:	2014/08/19
Area protected:	TRF #1 Sides

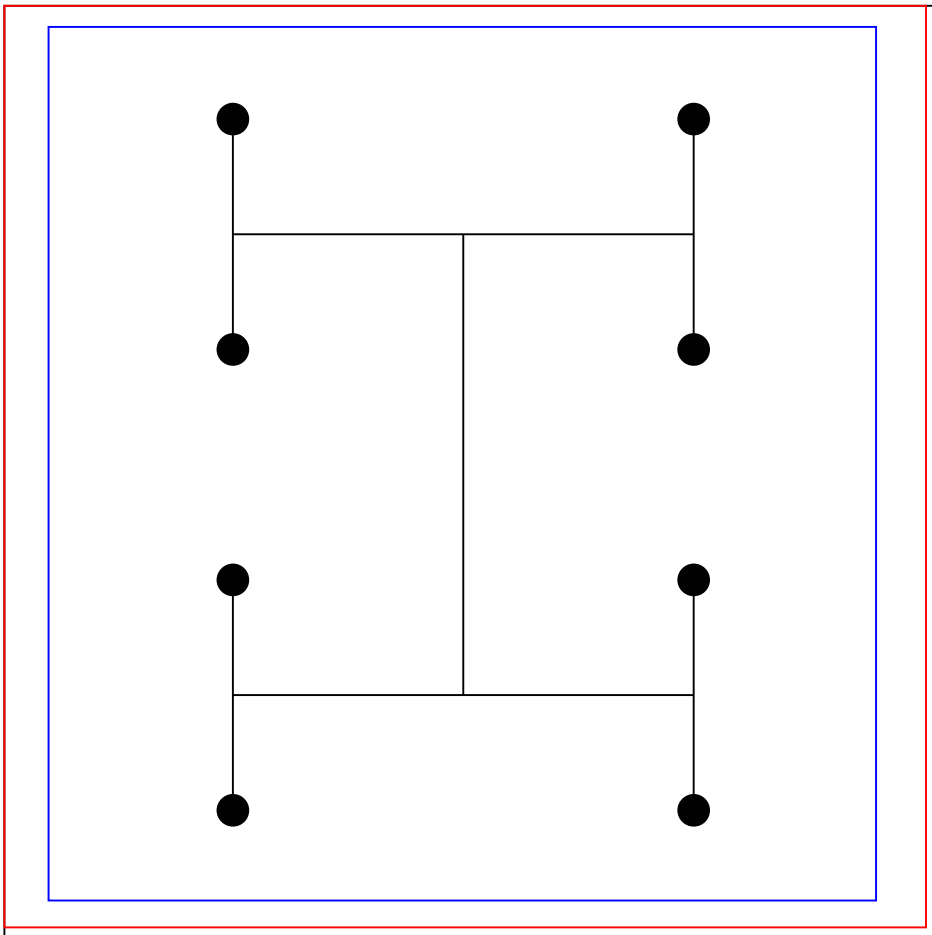

Design criteria

Maximum area	900.00 sq. ft
Density	0.05 gpm/sq. ft

Nozzles

Type:	TAR225
Quantity:	8
Spacing	X:15.00 ft Y:7.50 ft

Water requirements

Waterflow:	47.6 USGpm

Air supply

Discharge time:	5.0 min.
Cylinders required:	0.9
Model:	11BC439

Foam concentrate

Concentration:	2.0%
Quantity required:	4.8 USG
Type:	Foam -Aer-O-Lite 3%

Pipe schedules

1 Nozzle	1"	SCH40
2 Nozzles	1¼"	SCH40
4 Nozzles	1½"	SCH40
8 Nozzles	2"	SCH40
16 Nozzles	2½"	SCH10
32 Nozzles	4"	SCH10

Project name:	Winnetka IL Transfos
Reference number:	ICAF- 1734
Calculated by:	Lorne Levesque
Date calculated:	2014/08/19
Area protected:	TRF #1 Ends

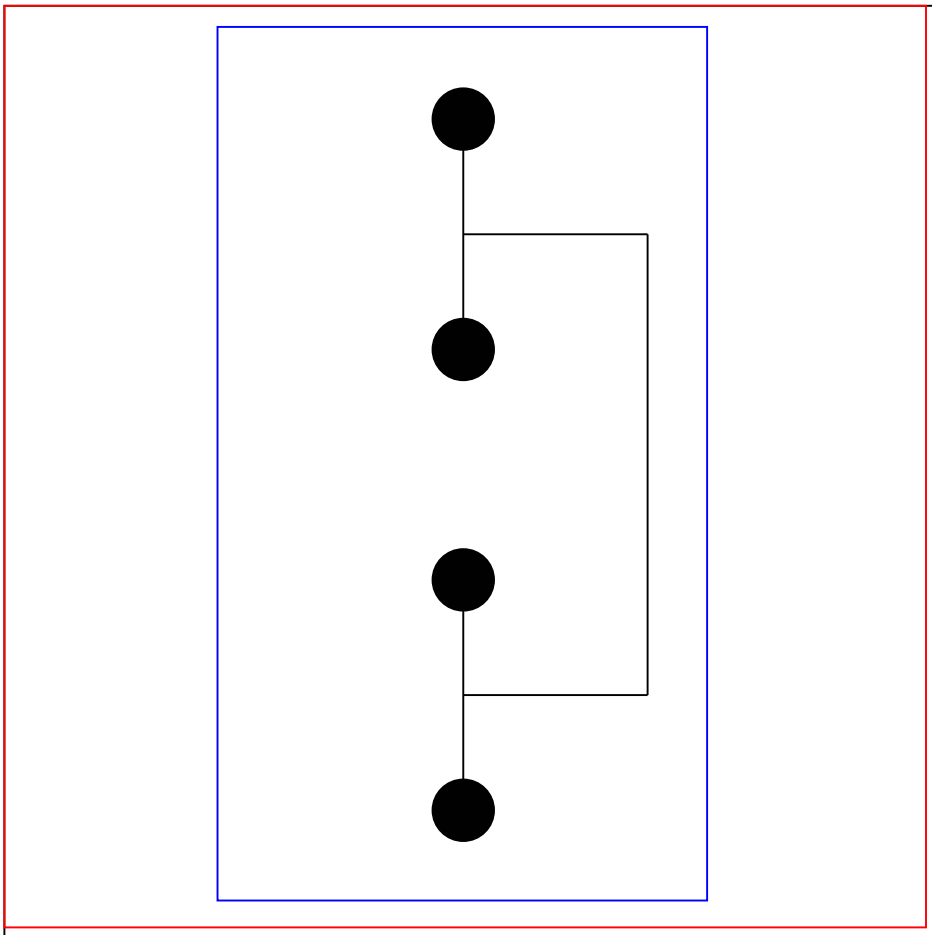

Design criteria

Maximum area	225.00 sq. ft
Density	0.11 gpm/sq. ft

Nozzles

Type:	TAR225
Quantity:	4
Spacing	X:0.00 ft Y:3.75 ft

Water requirements

Waterflow:	23.8 USGpm

Air supply

Discharge time:	5.0 min.
Cylinders required:	0.5
Model:	11BC439

Foam concentrate

Concentration:	2.0%
Quantity required:	2.4 USG
Type:	Foam -Aer-O-Lite 3%

Pipe schedules

1 Nozzle	1"	SCH40
2 Nozzles	1¼"	SCH40
4 Nozzles	1½"	SCH40
8 Nozzles	2"	SCH40
16 Nozzles	2½"	SCH10
32 Nozzles	4"	SCH10

Project name:	Winnetka IL Transfos
Reference number:	ICAF- 1734
Calculated by:	Lorne Levesque
Date calculated:	2014/08/19
Area protected:	TRF #2 Sides

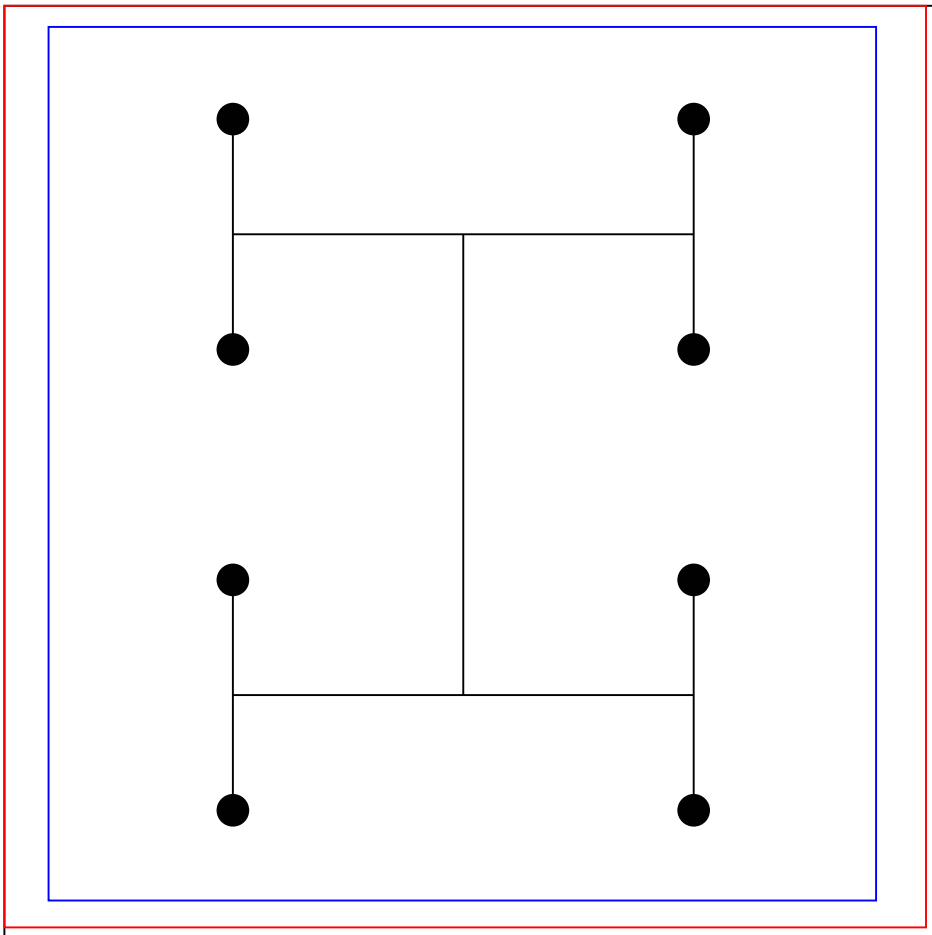

Design criteria

Maximum area	900.00 sq. ft
Density	0.05 gpm/sq. ft

Nozzles

Type:	TAR225
Quantity:	8
Spacing	X:15.00 ft Y:7.50 ft

Water requirements

Waterflow:	47.6 USGpm

Air supply

Discharge time:	5.0 min.
Cylinders required:	0.9
Model:	11BC439

Foam concentrate

Concentration:	2.0%
Quantity required:	4.8 USG
Type:	Foam -Aer-O-Lite 3%

Pipe schedules

1 Nozzle	1"	SCH40
2 Nozzles	1¼"	SCH40
4 Nozzles	1½"	SCH40
8 Nozzles	2"	SCH40
16 Nozzles	2½"	SCH10
32 Nozzles	4"	SCH10

Project name:	Winnetka IL Transfos
Reference number:	ICAF- 1734
Calculated by:	Lorne Levesque
Date calculated:	2014/08/19
Area protected:	TRF #2 Ends

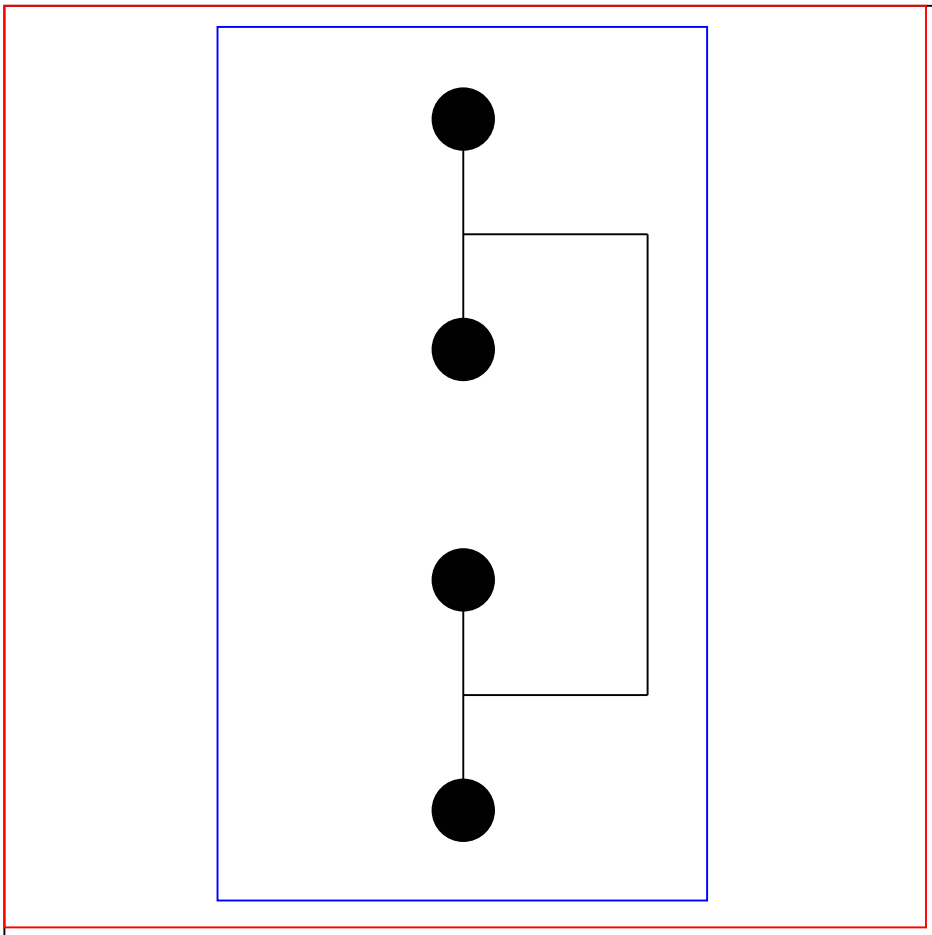

Design criteria

Maximum area	225.00 sq. ft
Density	0.11 gpm/sq. ft

Nozzles

Type:	TAR225
Quantity:	4
Spacing	X:0.00 ft Y:3.75 ft

Water requirements

Waterflow:	23.8 USGpm

Air supply

Discharge time:	5.0 min.
Cylinders required:	0.5
Model:	11BC439

Foam concentrate

Concentration:	2.0%
Quantity required:	2.4 USG
Type:	Foam -Aer-O-Lite 3%

Pipe schedules

1 Nozzle	1"	SCH40
2 Nozzles	1¼"	SCH40
4 Nozzles	1½"	SCH40
8 Nozzles	2"	SCH40
16 Nozzles	2½"	SCH10
32 Nozzles	4"	SCH10

Systèmes FIREFLEX Inc. Systems

Project name:	Winnetka IL Transfos
Reference number:	ICAF- 1734
Calculated by:	Lorne Levesque
Date calculated:	2014/08/19
Area protected:	TRF #3 Sides

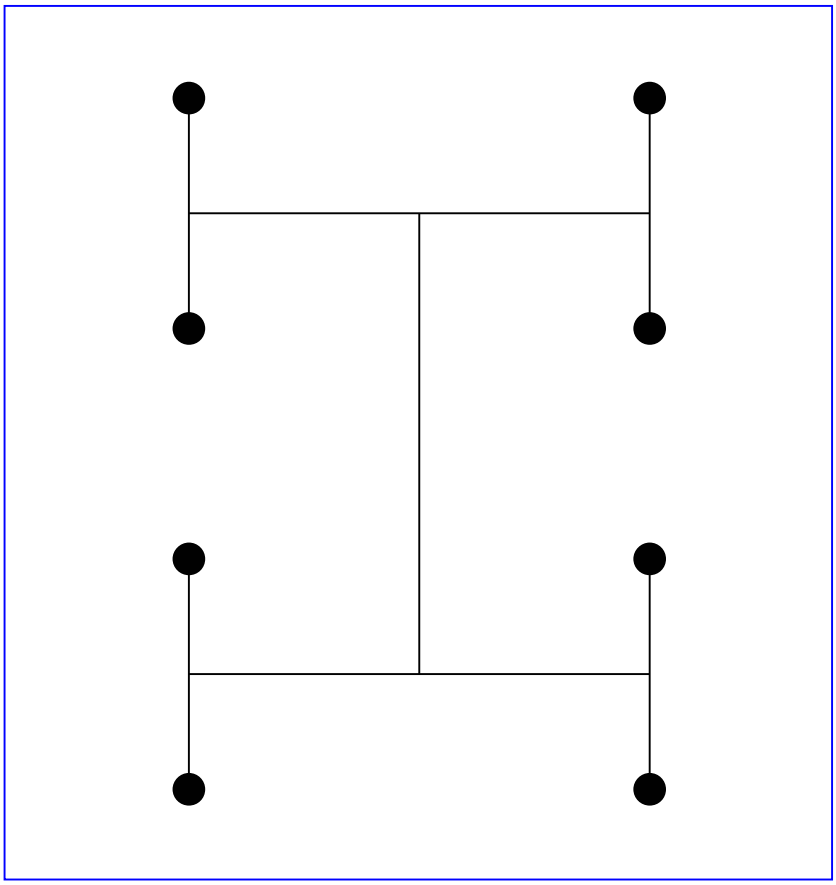

Design criteria

Maximum area	900.00 sq. ft
Density	0.05 gpm/sq. ft

Nozzles

Type:	TAR225
Quantity:	8
Spacing	X:15.00 ft Y:7.50 ft

Water requirements

Waterflow:	47.6 USGpm

Air supply

Discharge time:	5.0 min.
Cylinders required:	0.9
Model:	11BC439

Foam concentrate

Concentration:	2.0%
Quantity required:	4.8 USG
Type:	Foam -Aer-O-Lite 3%

Pipe schedules

1 Nozzle	1"	SCH40
2 Nozzles	1¼"	SCH40
4 Nozzles	1½"	SCH40
8 Nozzles	2"	SCH40
16 Nozzles	2½"	SCH10
32 Nozzles	4"	SCH10

Systèmes FIREFLEX Inc. Systems

Project name:	Winnetka IL Transfos
Reference number:	ICAF- 1734
Calculated by:	Lorne Levesque
Date calculated:	2014/08/19
Area protected:	TRF #3 Ends

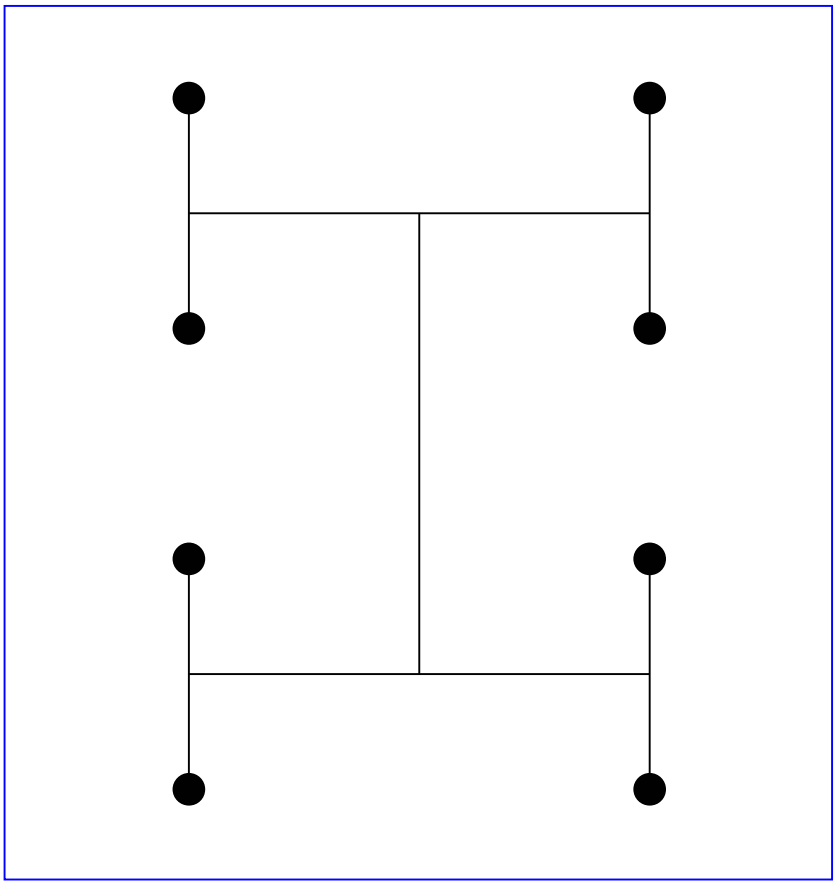

Design criteria

Maximum area	900.00 sq. ft
Density	0.05 gpm/sq. ft

Nozzles

Type:	TAR225
Quantity:	8
Spacing	X:15.00 ft Y:7.50 ft

Water requirements

Waterflow:	47.6 USGpm

Air supply

Discharge time:	5.0 min.
Cylinders required:	0.9
Model:	11BC439

Foam concentrate

Concentration:	2.0%
Quantity required:	4.8 USG
Type:	Foam -Aer-O-Lite 3%

Pipe schedules

1 Nozzle	1"	SCH40
2 Nozzles	1¼"	SCH40
4 Nozzles	1½"	SCH40
8 Nozzles	2"	SCH40
16 Nozzles	2½"	SCH10
32 Nozzles	4"	SCH10

Project name:	Winnetka IL Transfos
Reference number:	ICAF- 1734
Calculated by:	Lorne Levesque
Date calculated:	2014/08/19
Area protected:	TRF #4 Sides

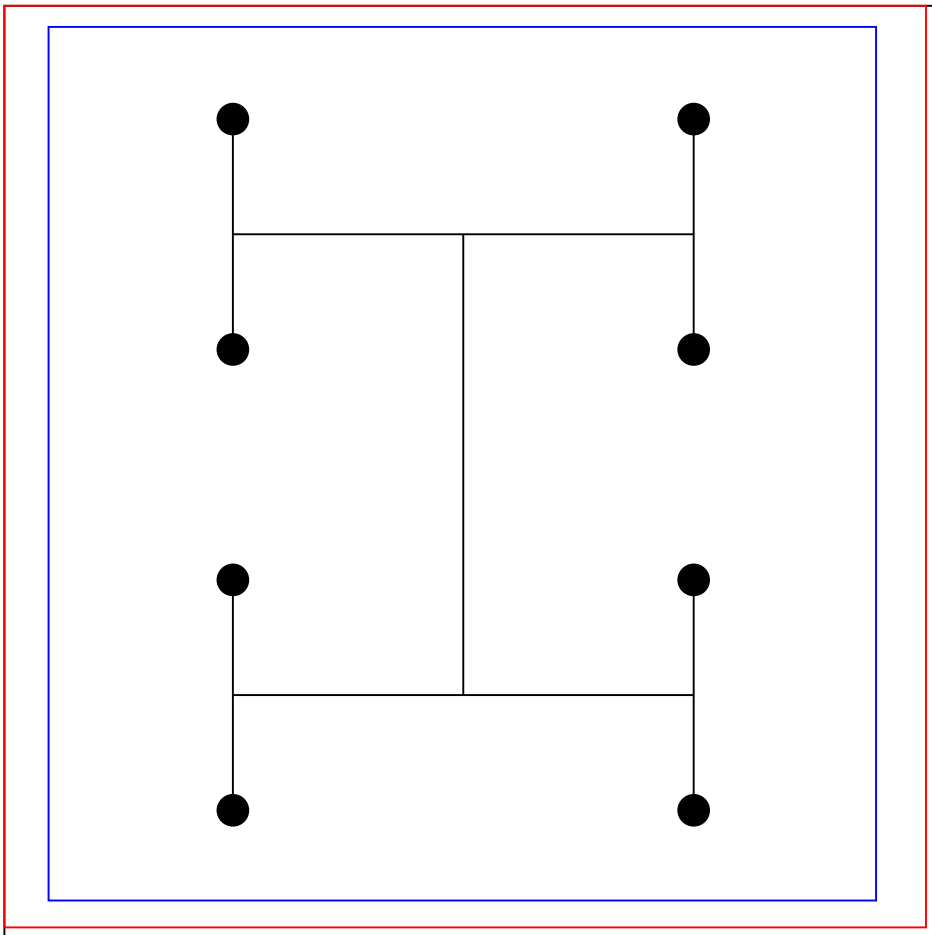

Design criteria

Maximum area	900.00 sq. ft
Density	0.05 gpm/sq. ft

Nozzles

Type:	TAR225
Quantity:	8
Spacing	X:15.00 ft Y:7.50 ft

Water requirements

Waterflow:	47.6 USGpm

Air supply

Discharge time:	5.0 min.
Cylinders required:	0.9
Model:	11BC439

Foam concentrate

Concentration:	2.0%
Quantity required:	4.8 USG
Type:	Foam -Aer-O-Lite 3%

Pipe schedules

1 Nozzle	1"	SCH40
2 Nozzles	1¼"	SCH40
4 Nozzles	1½"	SCH40
8 Nozzles	2"	SCH40
16 Nozzles	2½"	SCH10
32 Nozzles	4"	SCH10

Project name:	Winnetka IL Transfos
Reference number:	ICAF- 1734
Calculated by:	Lorne Levesque
Date calculated:	2014/08/19
Area protected:	TRF #4 Ends

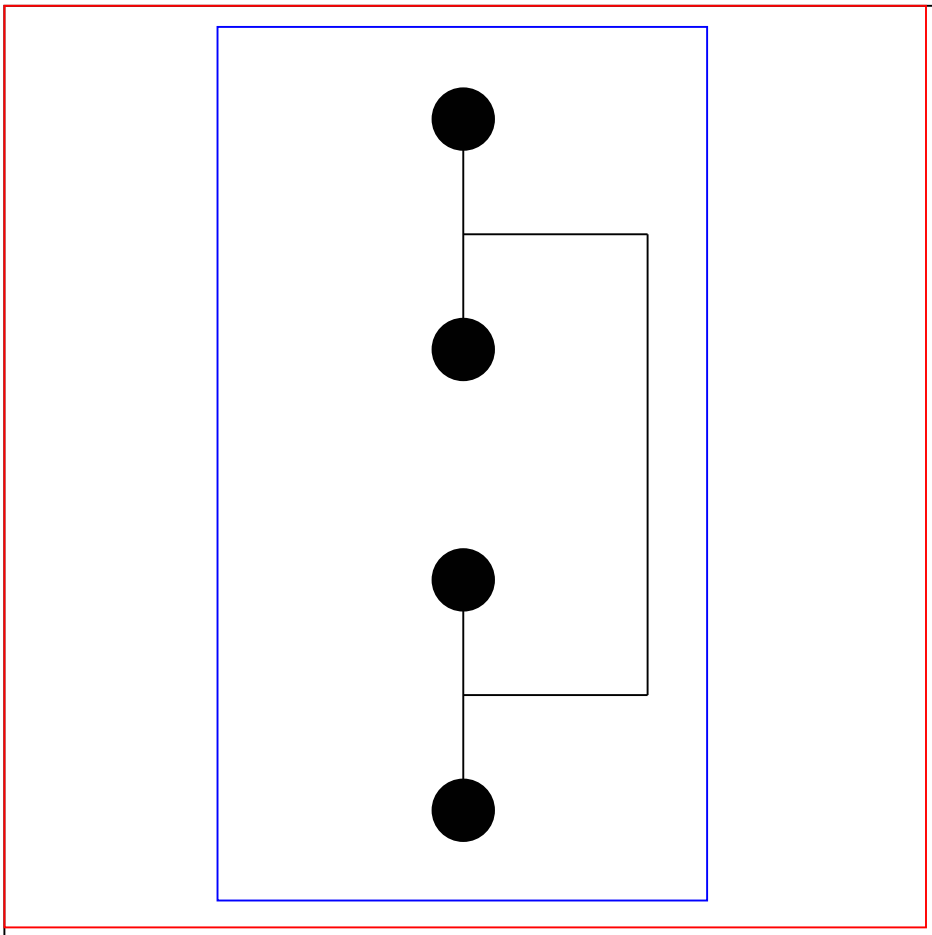

Design criteria

Maximum area	225.00 sq. ft
Density	0.11 gpm/sq. ft

Nozzles

Type:	TAR225
Quantity:	4
Spacing	X:0.00 ft Y:3.75 ft

Water requirements

Waterflow:	23.8 USGpm

Air supply

Discharge time:	5.0 min.
Cylinders required:	0.5
Model:	11BC439

Foam concentrate

Concentration:	2.0%
Quantity required:	2.4 USG
Type:	Foam -Aer-O-Lite 3%

Pipe schedules

1 Nozzle	1"	SCH40
2 Nozzles	1¼"	SCH40
4 Nozzles	1½"	SCH40
8 Nozzles	2"	SCH40
16 Nozzles	2½"	SCH10
32 Nozzles	4"	SCH10

Project name:	Winnetka IL Transfos
Reference number:	ICAF- 1734
Calculated by:	Lorne Levesque
Date calculated:	2014/08/19
Area protected:	Voltage Regulator

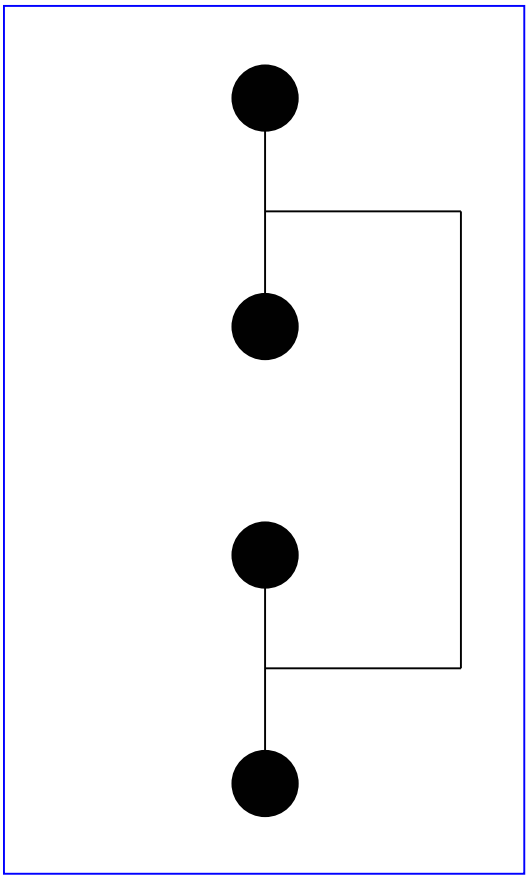

Design criteria

Maximum area	210.00 sq. ft
Density	0.11 gpm/sq. ft

Nozzles

Type:	TAR225
Quantity:	4
Spacing	X:0.00 ft Y:3.50 ft

Water requirements

Waterflow:	23.8 USGpm

Air supply

Discharge time:	5.0 min.
Cylinders required:	0.5
Model:	11BC439

Foam concentrate

Concentration:	2.0%
Quantity required:	2.4 USG
Type:	Foam -Aer-O-Lite 3%

Pipe schedules

1 Nozzle	1"	SCH40
2 Nozzles	1¼"	SCH40
4 Nozzles	1½"	SCH40
8 Nozzles	2"	SCH40
16 Nozzles	2½"	SCH10
32 Nozzles	4"	SCH10

Systèmes FIREFLEX Inc. Systems

Project name:	Winnetka Gensets & Lube Oil
Reference number:	ICAF- 1735 Gen Lube
Calculated by:	Lorne Levesque
Date calculated:	2014/09/01

Maximum system capacity based on selected areas

Discharge time:	5.0 min
Waterflow:	95.1 USGpm
Air supply:	
Cylinders required:	1.8
Model:	11BC439
Foam type:	National Foam -Aer-O-Lite 3%
Foam required:	9.5 USG
2.00%:	9.5 USG

Nozzles

Type	Quantity
TAR225	16

Water tank options

Water tank capacity:	475.5 USG
Cylinders required:	1.4
Model:	11BC439

Areas protected	Area	Maximum system capacity
1) Genset 1	1200.00 sq. ft	Yes
2) Genset 2	1200.00 sq. ft	No
3) Lube Tank 1	100.00 sq. ft	No
4) Lube Tank 2	100.00 sq. ft	No
5) Lube Tank 3	100.00 sq. ft	No
6) Bearings 1	100.00 sq. ft	No
7) Bearings 2	100.00 sq. ft	No
8) Bearings 3	100.00 sq. ft	No
Total: 8	3000.00 sq. ft	1

Systèmes FIREFLEX Inc. Systems

Project name:	Winnetka Gensets & Lube Oil
Reference number:	ICAF- 1735 Gen Lube
Calculated by:	Lorne Levesque
Date calculated:	2014/09/01
Area protected:	Genset 1

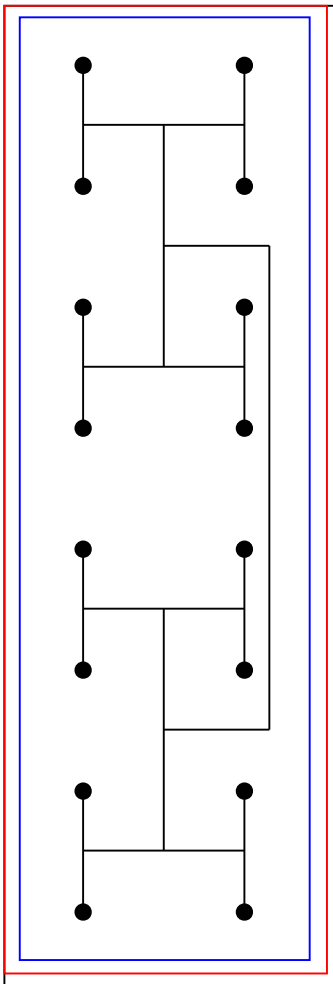

Design criteria

Maximum area	1200.00 sq. ft
Density	0.08 gpm/sq. ft

Nozzles

Type:	TAR225
Quantity:	16
Spacing	X:10.00 ft Y:7.50 ft

Water requirements

Waterflow:	95.1 USGpm

Air supply

Discharge time:	5.0 min.
Cylinders required:	1.8
Model:	11BC439

Foam concentrate

Concentration:	2.0%
Quantity required:	9.5 USG
Type:	Foam -Aer-O-Lite 3%

Pipe schedules

1 Nozzle	1"	SCH40
2 Nozzles	1¼"	SCH40
4 Nozzles	1½"	SCH40
8 Nozzles	2"	SCH40
16 Nozzles	2½"	SCH10
32 Nozzles	4"	SCH10

Systèmes FIREFLEX Inc. Systems

Project name:	Winnetka Gensets & Lube Oil
Reference number:	ICAF- 1735 Gen Lube
Calculated by:	Lorne Levesque
Date calculated:	2014/09/01
Area protected:	Genset 2

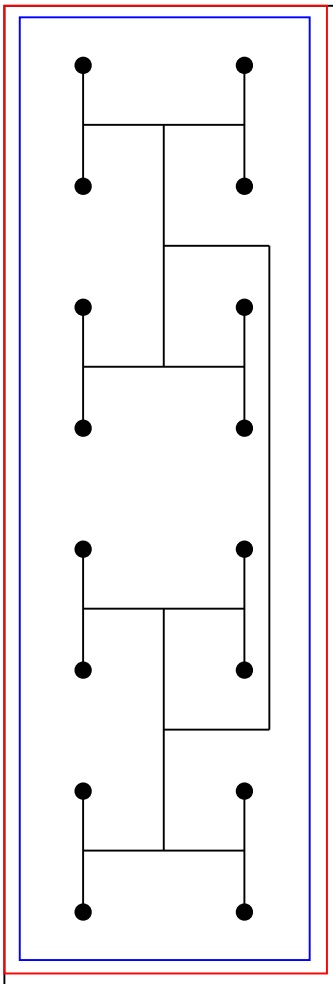

Design criteria

Maximum area	1200.00 sq. ft
Density	0.08 gpm/sq. ft

Nozzles

Type:	TAR225
Quantity:	16
Spacing	X:10.00 ft Y:7.50 ft

Water requirements

Waterflow:	95.1 USGpm

Air supply

Discharge time:	5.0 min.
Cylinders required:	1.8
Model:	11BC439

Foam concentrate

Concentration:	2.0%
Quantity required:	9.5 USG
Type:	Foam -Aer-O-Lite 3%

Pipe schedules

1 Nozzle	1"	SCH40
2 Nozzles	1¼"	SCH40
4 Nozzles	1½"	SCH40
8 Nozzles	2"	SCH40
16 Nozzles	2½"	SCH10
32 Nozzles	4"	SCH10

Systèmes FIREFLEX Inc. Systems

Project name:	Winnetka Gensets & Lube Oil
Reference number:	ICAF- 1735 Gen Lube
Calculated by:	Lorne Levesque
Date calculated:	2014/09/01
Area protected:	Lube Tank 1

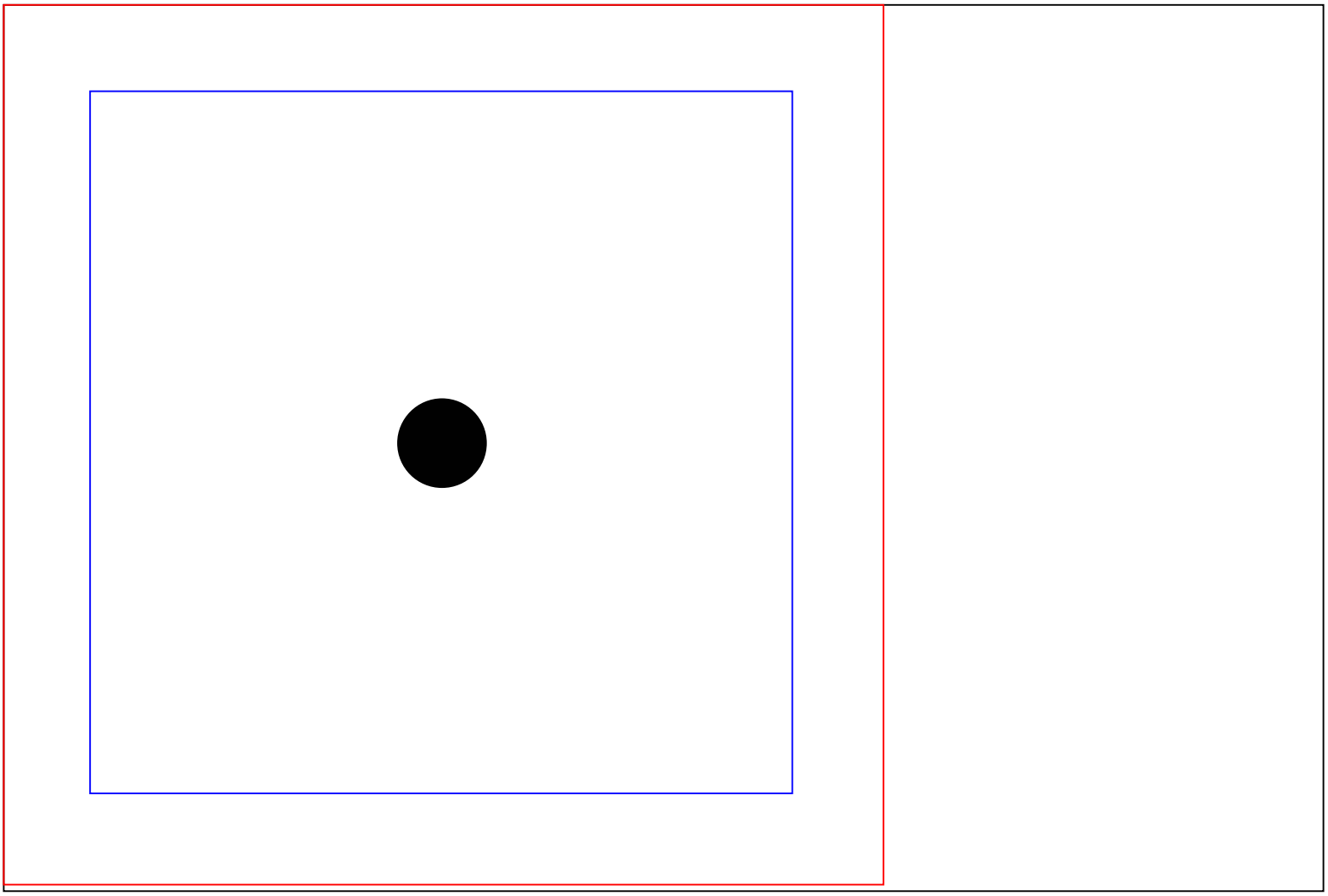

Design criteria

Maximum area	100.00 sq. ft
Density	0.06 gpm/sq. ft

Nozzles

Type:	TAR225
Quantity:	1
Spacing	X:0.00 ft Y:0.00 ft

Water requirements

Waterflow:	5.9 USGpm

Air supply

Discharge time:	10.0 min.
Cylinders required:	0.2
Model:	11BC439

Foam concentrate

Concentration:	2.0%
Quantity required:	1.2 USG
Type:	Foam -Aer-O-Lite 3%

Pipe schedules

1 Nozzle	1"	SCH40
2 Nozzles	1¼"	SCH40
4 Nozzles	1½"	SCH40
8 Nozzles	2"	SCH40
16 Nozzles	2½"	SCH10
32 Nozzles	4"	SCH10

Systèmes FIREFLEX Inc. Systems

Project name:	Winnetka Gensets & Lube Oil
Reference number:	ICAF- 1735 Gen Lube
Calculated by:	Lorne Levesque
Date calculated:	2014/09/01
Area protected:	Lube Tank 2

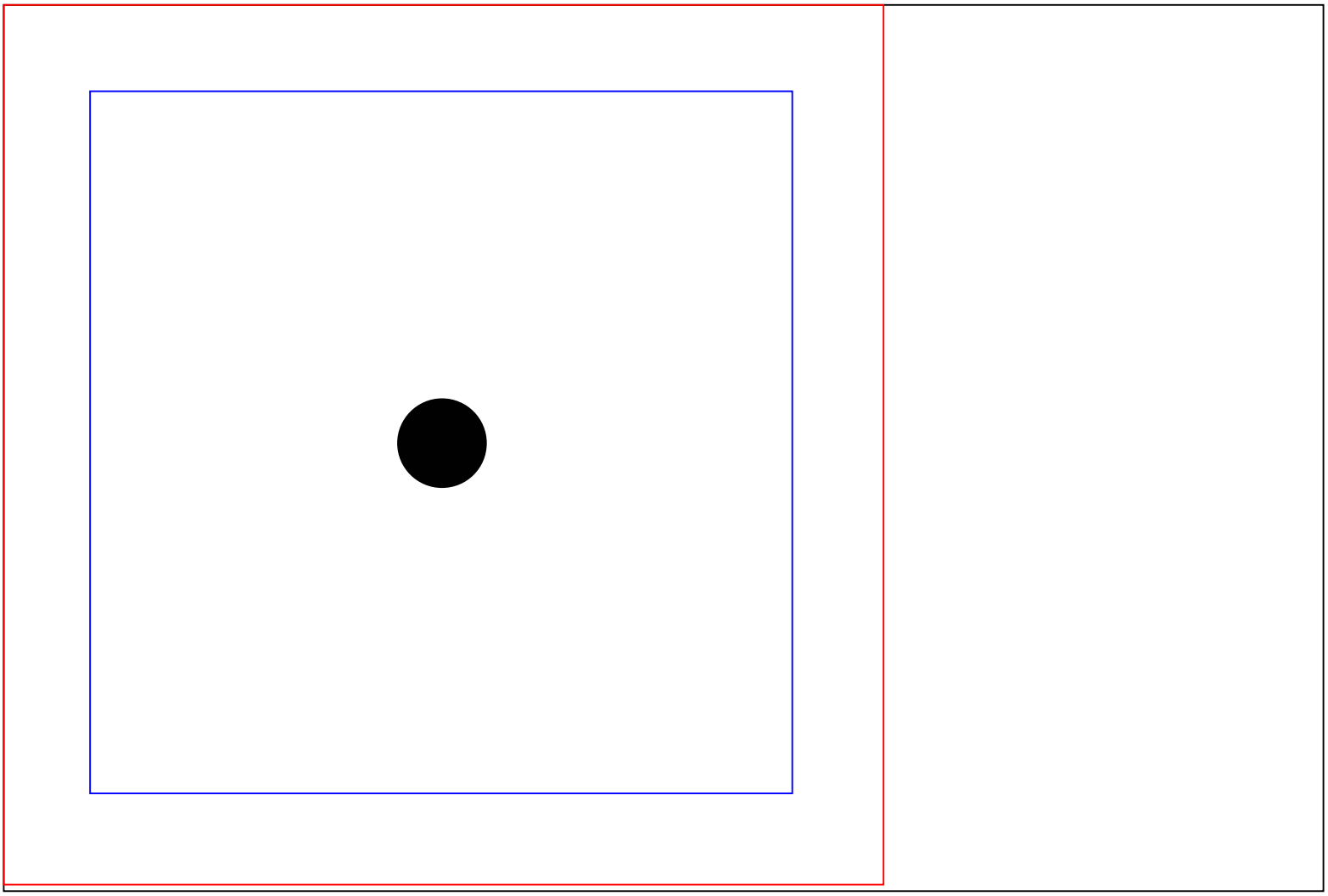

Design criteria

Maximum area	100.00 sq. ft
Density	0.06 gpm/sq. ft

Nozzles

Type:	TAR225
Quantity:	1
Spacing	X:0.00 ft Y:0.00 ft

Water requirements

Waterflow:	5.9 USGpm

Air supply

Discharge time:	10.0 min.
Cylinders required:	0.2
Model:	11BC439

Foam concentrate

Concentration:	2.0%
Quantity required:	1.2 USG
Type:	Foam -Aer-O-Lite 3%

Pipe schedules

1 Nozzle	1"	SCH40
2 Nozzles	1¼"	SCH40
4 Nozzles	1½"	SCH40
8 Nozzles	2"	SCH40
16 Nozzles	2½"	SCH10
32 Nozzles	4"	SCH10

Project name:	Winnetka Gensets & Lube Oil
Reference number:	ICAF- 1735 Gen Lube
Calculated by:	Lorne Levesque
Date calculated:	2014/09/01
Area protected:	Lube Tank 3

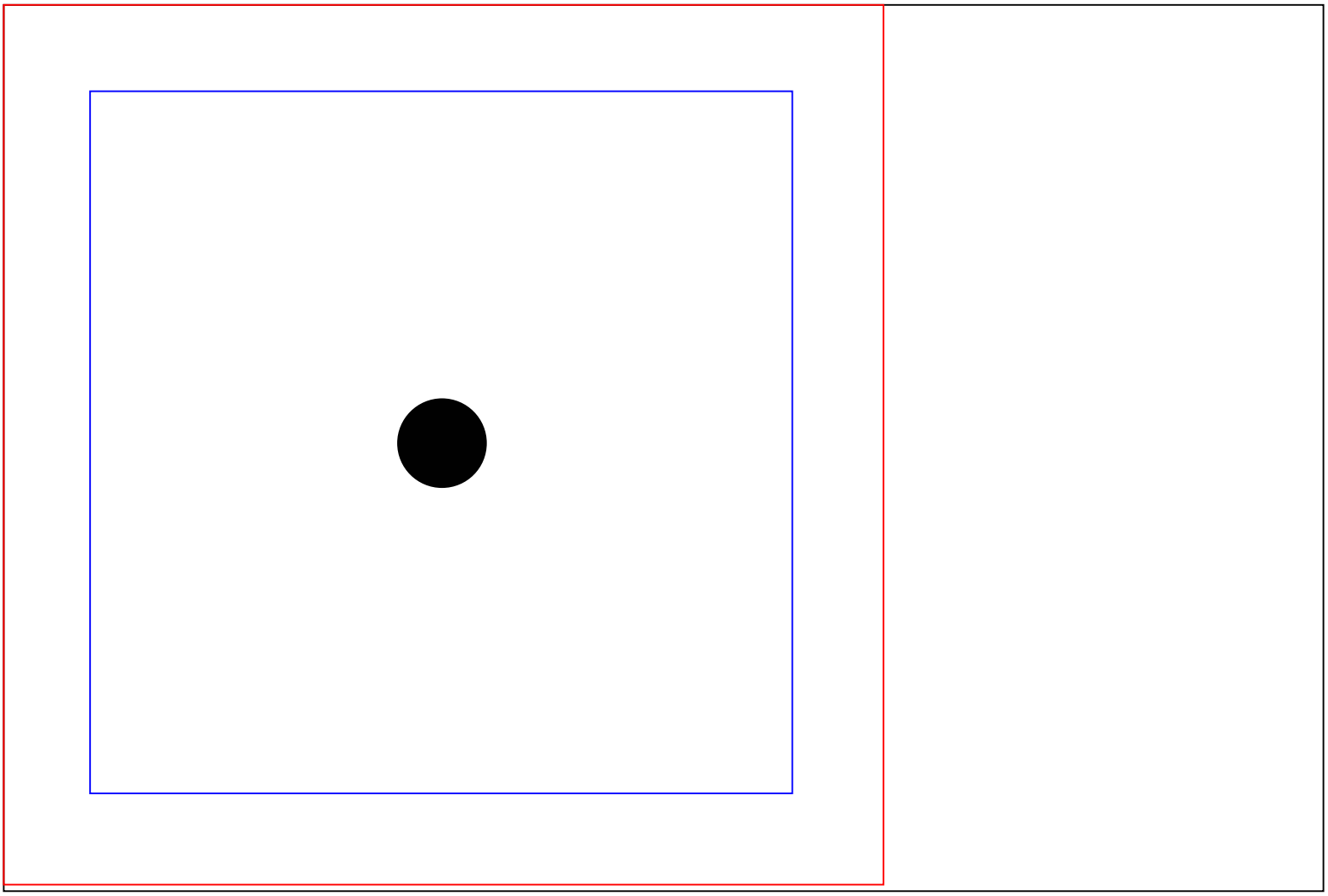

Design criteria

Maximum area	100.00 sq. ft
Density	0.06 gpm/sq. ft

Nozzles

Type:	TAR225
Quantity:	1
Spacing	X:0.00 ft Y:0.00 ft

Water requirements

Waterflow:	5.9 USGpm

Air supply

Discharge time:	10.0 min.
Cylinders required:	0.2
Model:	11BC439

Foam concentrate

Concentration:	2.0%
Quantity required:	1.2 USG
Type:	Foam -Aer-O-Lite 3%

Pipe schedules

1 Nozzle	1"	SCH40
2 Nozzles	1¼"	SCH40
4 Nozzles	1½"	SCH40
8 Nozzles	2"	SCH40
16 Nozzles	2½"	SCH10
32 Nozzles	4"	SCH10

Project name:	Winnetka Gensets & Lube Oil
Reference number:	ICAF- 1735 Gen Lube
Calculated by:	Lorne Levesque
Date calculated:	2014/09/01
Area protected:	Bearings 1

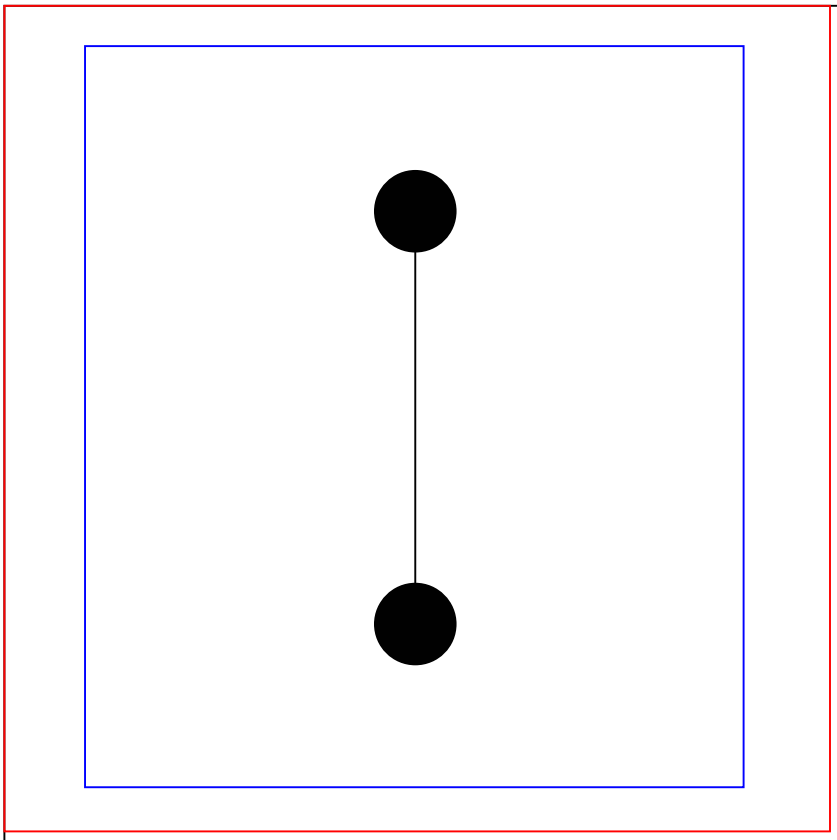

Design criteria

Maximum area	100.00 sq. ft
Density	0.12 gpm/sq. ft

Nozzles

Type:	TAR225
Quantity:	2
Spacing	X:0.00 ft Y:5.00 ft

Water requirements

Waterflow:	11.9 USGpm

Air supply

Discharge time:	40.0 min.
Cylinders required:	1.8
Model:	11BC439

Foam concentrate

Concentration:	2.0%
Quantity required:	9.5 USG
Type:	Foam -Aer-O-Lite 3%

Pipe schedules

1 Nozzle	1"	SCH40
2 Nozzles	1¼"	SCH40
4 Nozzles	1½"	SCH40
8 Nozzles	2"	SCH40
16 Nozzles	2½"	SCH10
32 Nozzles	4"	SCH10

Project name:	Winnetka Gensets & Lube Oil
Reference number:	ICAF- 1735 Gen Lube
Calculated by:	Lorne Levesque
Date calculated:	2014/09/01
Area protected:	Bearings 2

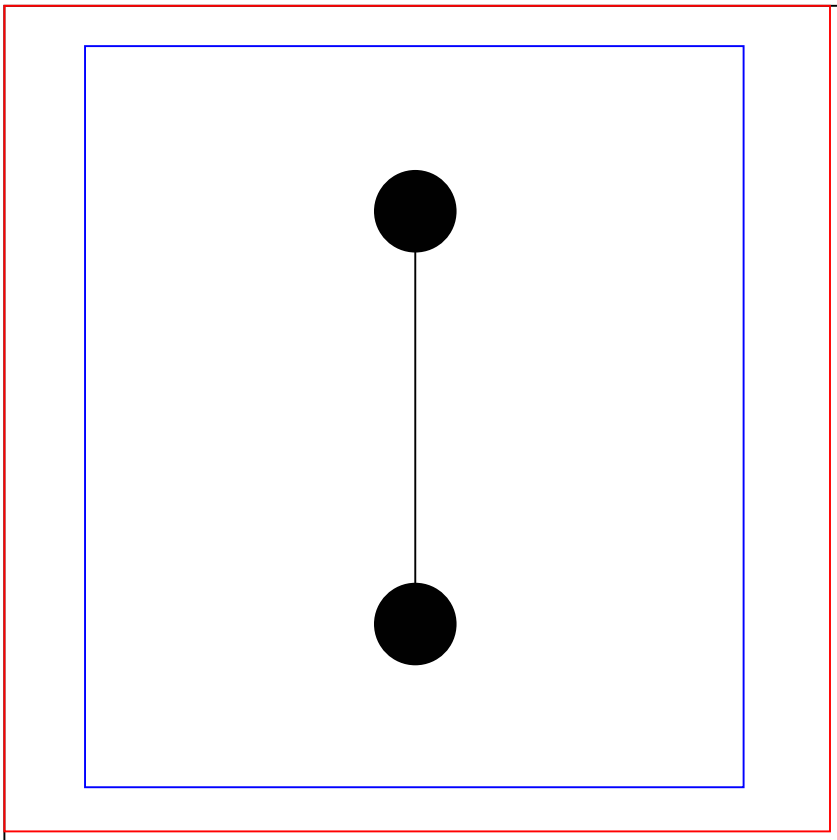

Design criteria

Maximum area	100.00 sq. ft
Density	0.12 gpm/sq. ft

Nozzles

Type:	TAR225
Quantity:	2
Spacing	X:0.00 ft Y:5.00 ft

Water requirements

Waterflow:	11.9 USGpm

Air supply

Discharge time:	40.0 min.
Cylinders required:	1.8
Model:	11BC439

Foam concentrate

Concentration:	2.0%
Quantity required:	9.5 USG
Type:	Foam -Aer-O-Lite 3%

Pipe schedules

1 Nozzle	1"	SCH40
2 Nozzles	1¼"	SCH40
4 Nozzles	1½"	SCH40
8 Nozzles	2"	SCH40
16 Nozzles	2½"	SCH10
32 Nozzles	4"	SCH10

Systèmes FIREFLEX Inc. Systems

Project name:	Winnetka Gensets & Lube Oil
Reference number:	ICAF- 1735 Gen Lube
Calculated by:	Lorne Levesque
Date calculated:	2014/09/01
Area protected:	Bearings 3

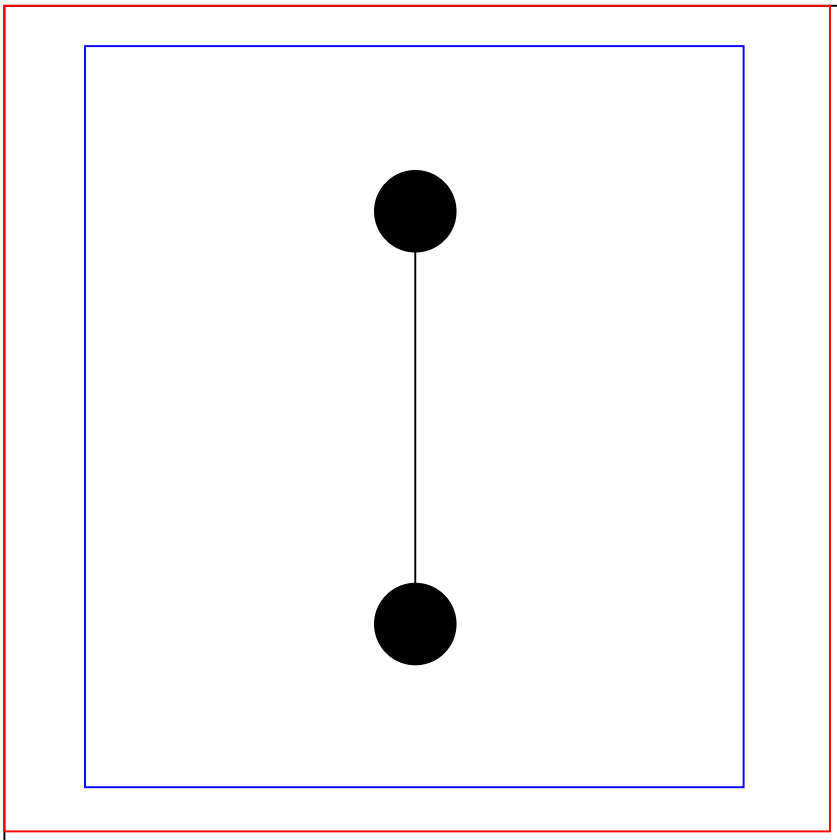

Design criteria

Maximum area	100.00 sq. ft
Density	0.12 gpm/sq. ft

Nozzles

Type:	TAR225
Quantity:	2
Spacing	X:0.00 ft Y:5.00 ft

Water requirements

Waterflow:	11.9 USGpm

Air supply

Discharge time:	40.0 min.
Cylinders required:	1.8
Model:	11BC439

Foam concentrate

Concentration:	2.0%
Quantity required:	9.5 USG
Type:	Foam -Aer-O-Lite 3%

Pipe schedules

1 Nozzle	1"	SCH40
2 Nozzles	1¼"	SCH40
4 Nozzles	1½"	SCH40
8 Nozzles	2"	SCH40
16 Nozzles	2½"	SCH10
32 Nozzles	4"	SCH10

National Research Council Canada | Conseil national de recherches Canada

NRC · CNRC

Client Report

B-4142.1

Use of Compressed-Air-Foam Technology to provide Fire Protection for Power Transformers.

For

FireFlex Systems Inc.
1935 Lionel-Bertrand Blvd
Boisbriand, Qc
J7H 1N8

31 March 2004

Use of Compressed-Air-Foam Technology to Provide Fire Protection for Power Transformers

by

Andrew Kim and George Crampton

1.0 INTRODUCTION

Power transformers play an important role in making communities function by distributing the power. Any malfunction or out of commission of those power transformers will create havoc in the community. Power transformers deal with high voltage electric power and there is a strong possibility of accidental fire incidents in the power transformer. Because of the high possibility of fire occurrence and the important role they play in the maintenance of normal life in the community, the power transformers must have a proper fire protection system in place to provide the best fire protection.

Current fire protection systems for power transformers require a large quantity of water, which may cause a problem to their electrical function as well as creating water damage. Also, clean-up after fire suppression is another problem. Power transformers contain hazardous materials, and any run-off water from the fire suppression activities has to be collected. It is a costly proposition to provide infrastructure to contain the run-off water resulting from the fire suppression of a power transformer, especially when a large amount of water is used to suppress power transformer fires. Another fire protection approach is to use air-aspirated foam system. However, current air-aspirated foam systems produce poor quality foam, therefore a large quantity of foam is needed to provide proper fire protection to the power transformers. This again creates a clean-up problem afterwards, delays the re-start of the power transformers and prolongs the power shutdown to the community.

The National Research Council of Canada (NRC) has developed a means of producing Compressed-Air-Foam (CAF) in a fixed pipe system, incorporating a sophisticated engineering design of the nozzle and the piping system. This system provides a superior quality foam with uniform distribution and high momentum. NRC has proven by full-scale tests, that CAF has superior fire suppression performance compared to current foam or sprinkler systems. Therefore, CAF may be an ideal solution in providing fire protection for power transformers, with its superior fire suppression performance and low water requirement, thus minimizing the clean-up problem.

In this project, a study was carried out to develop a CAF distribution system and to evaluate the fire suppression capability of the CAF system for the protection of power transformers. This report describes the experimental facility, including the power transformer mock-up and instrumentations, and presents experimental results of the fire suppression capability of the CAF system for power transformer protection. The research on which this report is based was a joint research project between NRC and Fire Flex Systems Inc.

2.0 EXPERIMENTAL SET-UP AND PROCEDURE

A series of full-scale fire tests was carried out to determine the fire suppression capability of the CAF system using a power transformer mock-up facility. Also, one full-scale fire test was carried out with a traditional water deluge system, to compare the fire suppression capabilities of the newly-developed CAF system with the water deluge system in providing fire protection for power transformers.

2.1 Power transformer mock-up test facility

A mock-up power transformer was constructed for the experimental study. The power transformer mock-up was constructed of 20 gauge formed steel panels fastened to a tubular steel frame 3.9 metres wide by 1.2 metres deep by 3 metres high. This was a scale representation of an actual power transformer at Hydro Quebec's Berri Station in Montreal. The mock-up was built to represent the front half of the transformer including the oil reservoir and cooling fins. The front half was chosen because it represented more severe challenges to the fire protection systems than the back half, due to more obstacles on the transformer and also a greater fire hazard with a larger amount of fuel. Figure 2.1 shows the schematic drawing of the power transformer mock-up. Figure 2.2 shows the picture of the mock-up test facility.

The fire scenario envisioned in the power transformer fire was an explosion in the main transformer body due to internal arcing, resulting in the blowing of a high voltage bushing through the top of the power transformer or the rupturing of the transformer oil reservoir leaking oil onto the top of the transformer. The oil on top of the transformer would be involved in fire and overflowing over the side and front of the power transformer, producing cascading fires as well as pool fires around the bottom of the transformer. This worst case fire scenario for the power transformer was simulated in this experimental study.

Several fire pans were constructed to provide the fire hazard on the top, bottom centre and sides of the mock-up. The top pan had a cut out section along the front wall to produce a

cascading fire 1.8 metres wide under the reservoir and between the cooling fins. This would be the area considered to be the most challenging for a fire protection system. The oil reservoir was simulated by a 1.2 m diameter and 2.1 m long cylindrical steel duct. A 5 cm steel pipe with a length of 9 m was used to safely provide the oil to the top pan from a 205 litre heated drum. The oil was delivered to the top pan by gravity fed through the pipe with a flow rate of approximately 80 litres/minute. The oil in the top pan then overflowed down the face of the mock-up.

2.2 Instrumentation

Four thermocouples were installed on the power transformer mock-up. One was located over the center of the top pan and the second one was located in the middle of the space between the oil reservoir and the main body of the transformer. The other two thermocouples were located beside the two fire detectors of the water deluge system, which was installed in the mock-up for experimental evaluation. This water deluge system had the same configuration as the one actually installed in a Montreal sub-station for the power transformers protection.

Heat flux meters were used to monitor the radiation fluxes from the power transformer fires. A mast containing 5 heat flux meters was located 6 m from the front corner of the mock-up. The bottom heat flux meter was located 2.5 m above the floor, and the second one was 3.75 m above, a third one was 4.375 m above, a fourth one was 5 m above, and the top one was 6.25 m above the floor. All heat flux meters, except the middle one, were placed 6 m away from the front corner of the mock-up. The middle heat flux meter was 5.375 m away from the front corner of the mock-up.

Two video cameras were used for a visual record of the experiments. One video camera was located at 4 m above the top front corner of the mock-up and the second one was at ground level near the front corner.

2.3 Test fuels

Tests were conducted using electrical insulating oil typically used in power transformers and diesel fuel. Most of the tests were conducted using electrical insulating oil (Voltesso 35, produced by Imperial Oil). Voltesso 35 has a density of 877 kg/m^3 at 15ºC, and its flash point is 150ºC. During the experiments, the electrical insulating oil was pre-heated to approximately 75ºC before it was ignited for the test.

In a preliminary study, it was determined that heated diesel performs similarly to electrical insulating oil (transformer oil) for the suppression performance evaluation of the fire suppression systems, and diesel is much cheaper than electrical insulating oil. Therefore, in some tests, diesel was used instead of electrical insulating oil. The diesel was pre-heated to approximately 32ºC to 41ºC in the tests.

2.4 Suppression systems

A CAF distribution system was developed for the power transformer protection. Several CAF configurations were studied to determine the most efficient way to distribute foam around the vertical and horizontal obstacles of the power transformer. The final CAF system selected for this project incorporated two types of nozzles; Large Flow Gear Driven Rotary (GDR) Nozzle and Small Flow Turbine Action Rotary (TAR) Nozzle. The pictures of GDR and TAR nozzles are shown in Figure 2.3. The TAR nozzles were utilized in 3 to 8 nozzle CAF configurations in the tests for the fire suppression of the mock-up test facility. The GDR nozzles were utilized in 2 nozzle configuration for the mock-up facility. CAF was generated using Fire Flex's ICAF generating system (shown in Figure 2.4).

For the 4 nozzle CAF system, one TAR nozzle was located on each of the two sides of the mock-up and two TAR nozzles were used to provide protection on the front of the mock-up. In the 3 nozzle system, one nozzle was used for each side of the mock-up and only one nozzle was used to provide protection on the front of the mock-up. The location of nozzles for the 3 and

4 TAR nozzle CAF systems for the mock-up is shown in Figures 2.5 and 2.6. For the 8 nozzle CAF system, two nozzles were located on each side of the mock-up (one nozzle near the top, spraying onto the top of the mock-up, and one nozzle below the top, spraying onto the side wall) and four nozzles were used to provide protection on the front of the mock-up (two nozzles at the top edge spraying toward the top side of the front wall and oil reservoir, and two nozzles below the top spraying onto the front wall). Figure 2.7 shows the locations of the nozzles.

For the GDR nozzle CAF system, one GDR nozzle was located on the left side of the mock-up and one GDR nozzle was located at the front of the mock-up. Both nozzles were placed above the top level of the mock-up, spraying down in an angle. The right side of the mock-up was not protected in these tests with the assumption that that side of the mock-up can be protected by a CAF system protecting the back half of the power transformer. The location of the nozzles for the 2 GDR nozzle CAF system for the mock-up is shown in Figure 2.8.

A test was also conducted using a water deluge system as a comparison to the CAF system. The water deluge system tested was similar to the one installed in an actual power transformer at Hydro Quebec's Berri Station in Montreal. The deluge system consisted of a ring of 21 nozzles, with a total flow rate of 910 litres/min. A picture of the mock-up with the water deluge system installation is shown in Figure 2.9.

2.5 Test procedure

The test fuel in the top pan was ignited at time zero, then the fuels in the side pan and front pan were ignited in sequence. At 30 s, the fuel was allowed to flow onto the top pan with a flow rate of approximately 80 litres/minute. This resulted in an overflow of the fuel from the top pan down the front face of the mock-up onto the front pan, causing a cascading fire on the front face of the mock-up. At approximately 1 min 10 s, when the flame from the front pan was fully developed with a flame height reaching the top of the mock-up and flames attacking the side of the oil reservoir, the CAF or water deluge suppression system was activated to control the fire. The suppression action was maintained until the fire was completely extinguished. During the

test, the solution flow rate of the suppression system, temperature readings at several points of the mock-up, radiation fluxes from the fire, fire suppression time (99% extinguishment) and complete extinguishment time were recorded.

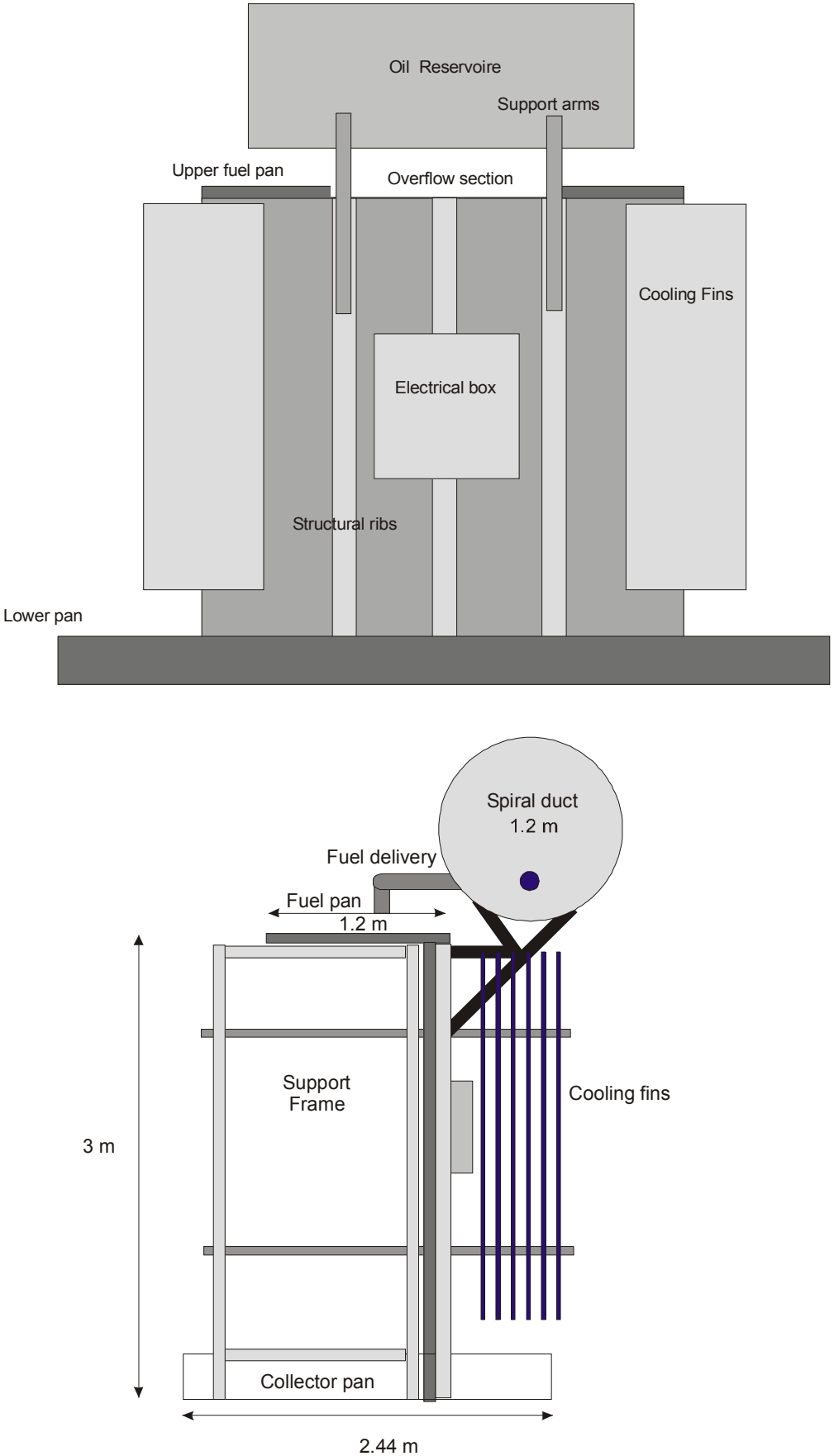

Figure 2.1. Schematic Drawing of power transformer mock-up

Figure 2.2. Photo of transformer mock-up

Large Flow Gear Driven Nozzle (GDR)

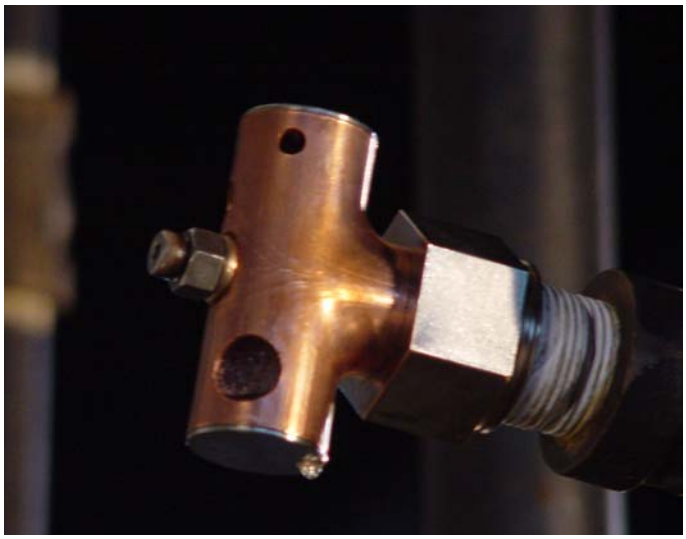

Small Flow Rotary Nozzle (TAR)

Figure 2.3. CAF Nozzles

ICAF Generating System

Figure 2.4. ICAF Generating System

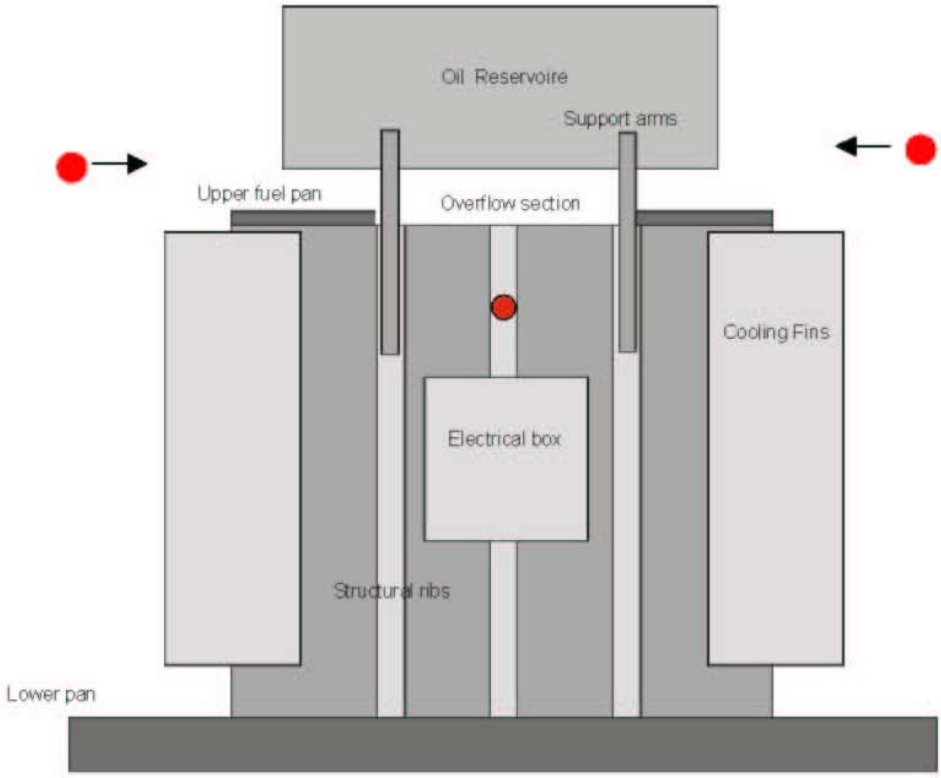

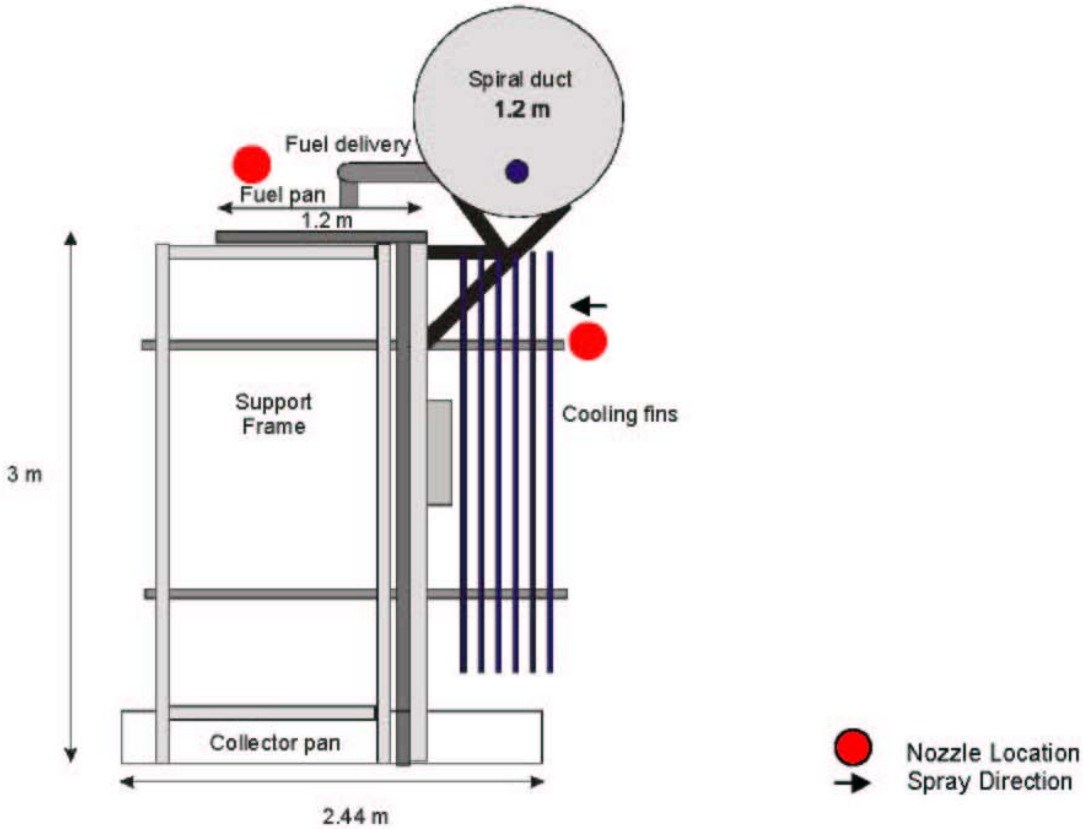

Figure 2.5. CAF nozzle locations for 3 nozzle system.

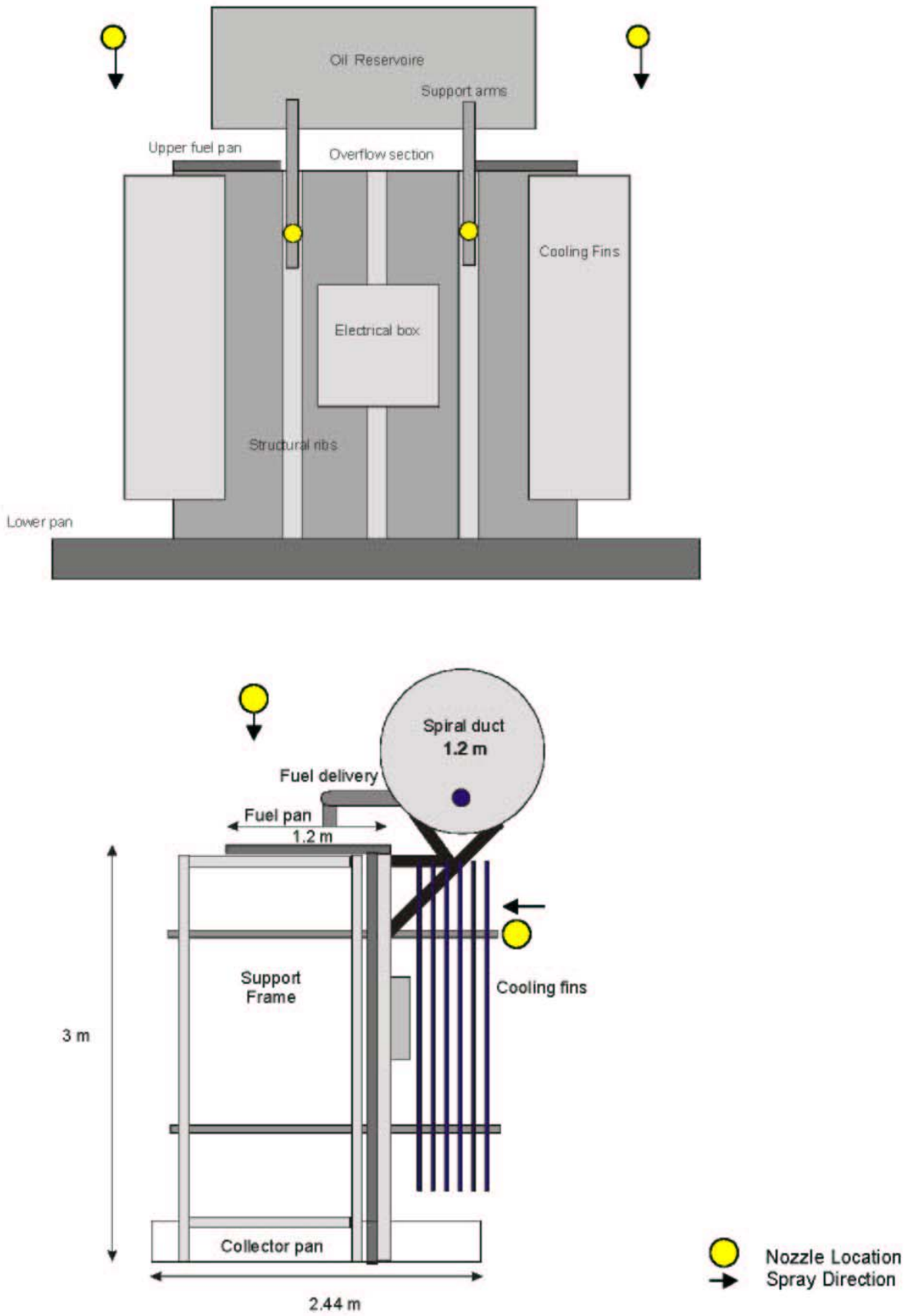

Figure 2.6. CAF nozzle locations for 4 nozzle system.

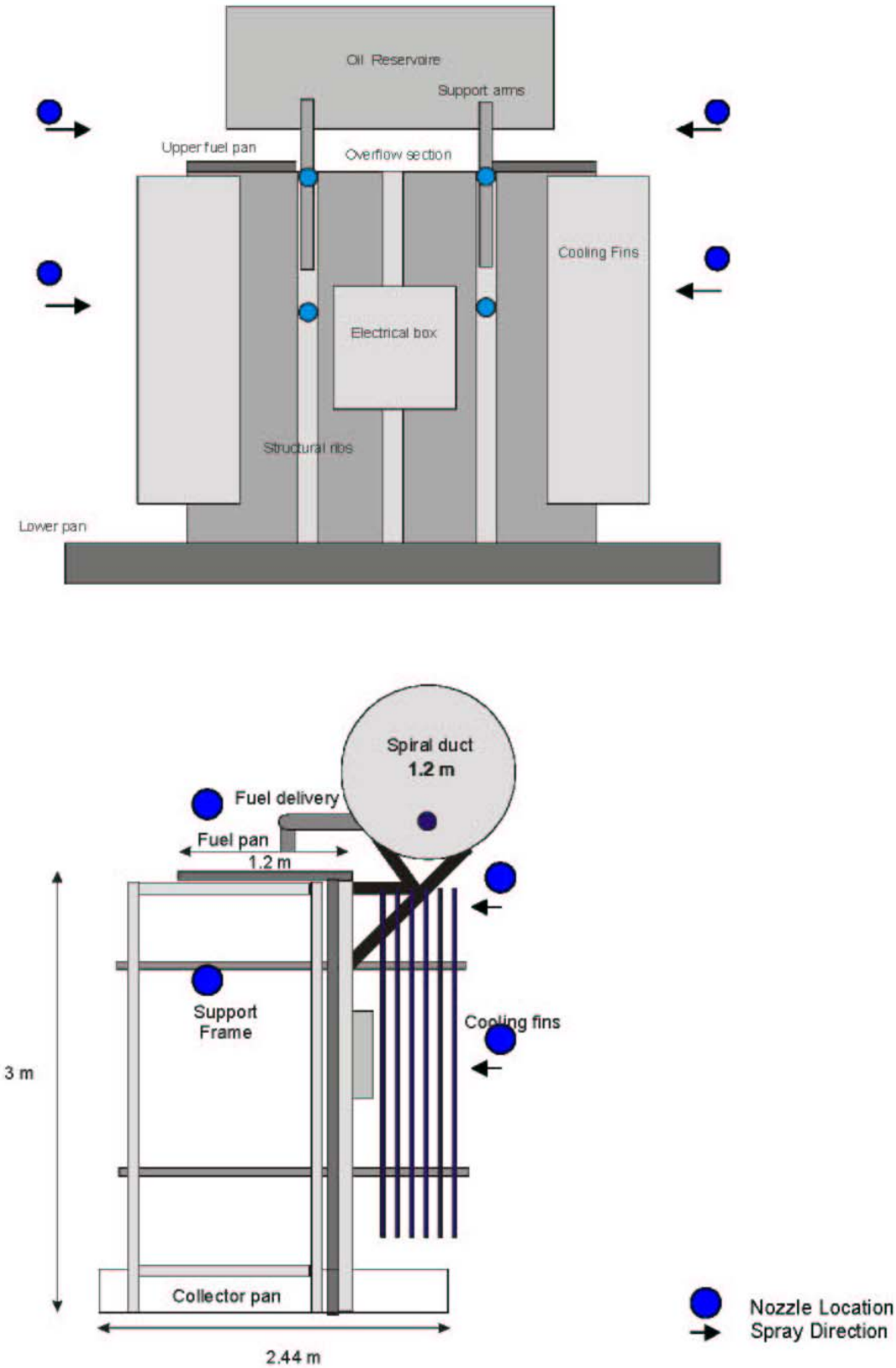

Figure 2.7. CAF nozzle locations for 8 nozzle system.

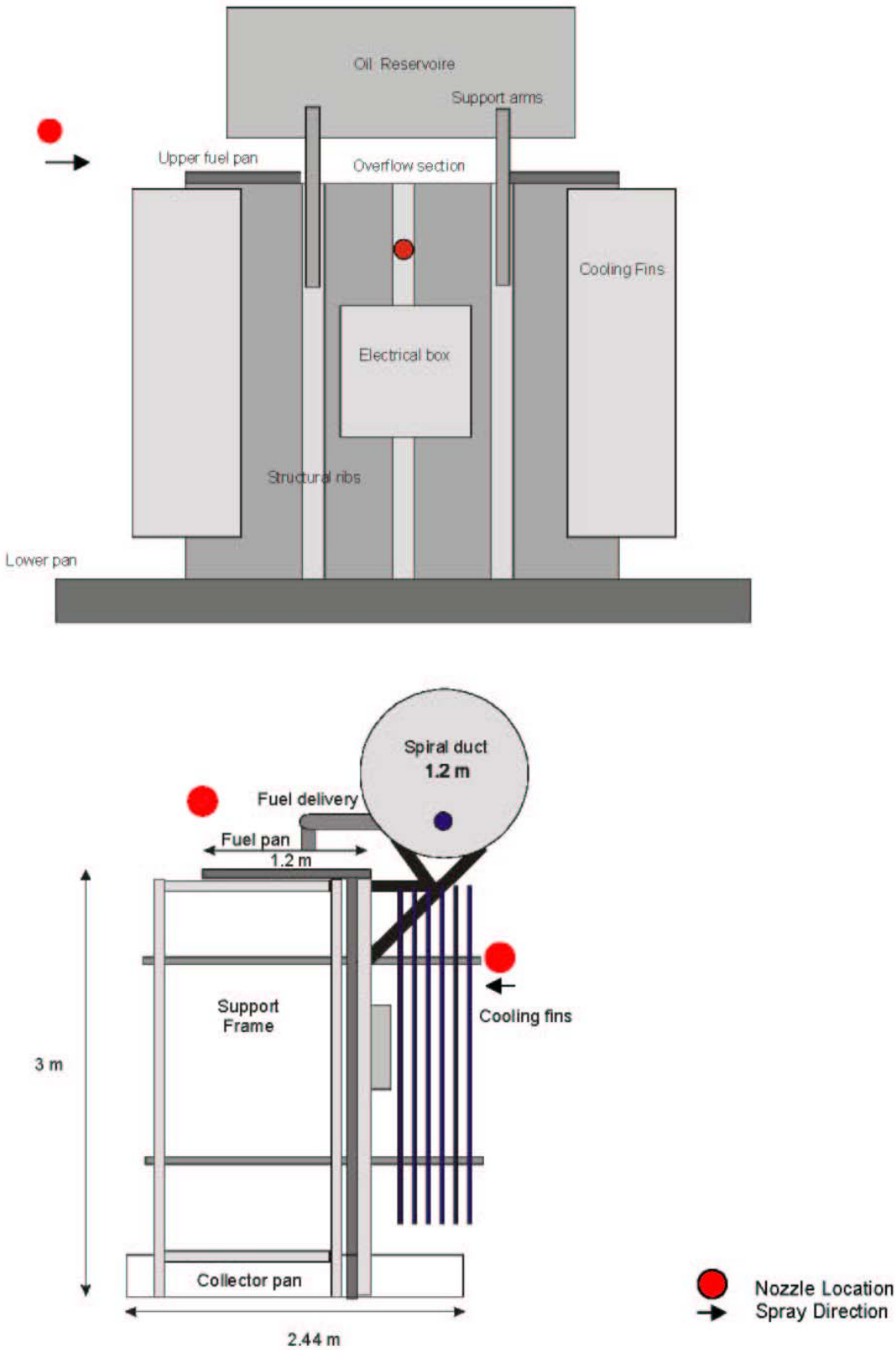

Figure 2.8. CAF nozzle locations for 2, GDR nozzle system.

Figure 2.9 Picture of test mock-up with water deluge system (21 Nozzles, 910 l/min)

3.0 RESULTS AND DISCUSSION

Table 3.1 shows the summary of the test conditions and fire suppression performance results of the water deluge and CAF systems for power transformer protection.

In Test #1, the water deluge system extinguished the test fire in 3 min 53 s. The water deluge system had 21 spray nozzles, and the total flow rate was 910 L/min. The test fuel was transformer oil (Voltesso 35), which was pre-heated to 75ºC before the start of the test. The water deluge system took 2 min 5 s to control (99% extinguishment, obtained from heat flux meter data; heat flux value is 1% of the peak heat flux value) the fire, eventually extinguishing it completely in 3 min 53 s. Figure 3.1 presents a sequence of pictures showing the extinguishment of the fire by the water deluge system. This fire suppression performance of the water deluge system will be the basis of comparison for all the CAF systems tested in this study.

In Test #2, 4 TAR nozzles were used in the CAF system. Total flow rate was 88 L/min, and Class A foam concentrate was used at 1%. The test fuel was transformer oil, pre-heated to 76.5ºC. The CAF system controlled the fire in 1 min 9 s and extinguished most of the fire, except one small pan on the side, in 1 min 24 s. The foam distribution was not ideal, and the small side pan did not receive proper foam distribution density and was left burning. In subsequent tests, the side nozzle of the TAR CAF system was adjusted to improve its foam distribution.

Figure 3.2 shows the temperatures measured at the space between the front top edge and the oil reservoir of the transformer mock-up during fire suppression by the water deluge system (Test #1) and CAF system (Test #2). These temperatures indicate the flame condition on the front face of the mock-up. The figure shows that there was an initial fire flare up with the water deluge system, whereas with CAF, there is a substantial decrease in temperature as soon as the CAF system was activated.

In Test #3, 3 TAR nozzles were used in the CAF system, with the angle of the side nozzle adjusted to improve the foam distribution. The 3 TAR nozzle CAF system had only one nozzle at the front of the mock-up instead of two nozzles in Test #2. The total flow rate was 66 L/min, and the foam concentrate and the test fuel were the same as in Test #2. The CAF system controlled the fire in 2 min 16 s and extinguished the fire in 4 min 2 s. Figure 3.3 shows the temperatures measured at the space between the front top edge and the oil reservoir during fire suppression by the water deluge system (Test #1) and CAF system (Test #3). It shows similar fire suppression performances by the two systems. However, the CAF system used less than 8% of the water flow rate of the water deluge system.

Tests #4 and #5 were similar to Test #3, except Class B foam concentrate was used instead of Class A. In Test #4, a 3 TAR nozzle CAF system using 2% Class B foam concentrate, extinguished the transformer fire in 25 s. Figure 3.4 shows the heat flux values measured by a heat flux meter located at 5.375 m away from the front corner of the mock-up and 4.375 m above the floor. It shows a sharp decrease in heat flux values with the discharge of either systems, however, a much sooner extinguishment by CAF compared to the water deluge system.

In Test #5, when the pre-burn time was extended to 2 min 26 s, resulting in a fierce fire engulfing the whole test mock-up, the CAF system took 1 min 21 s to control the fire and extinguished it in 2 min 54 s. Figures 3.5 and 3.6 show heat flux and plume temperature curves for both the water deluge and CAF systems. The graphs clearly show a substantially larger fire at the time of the CAF activation. Increasing the pre-burn time, or delaying the activation of the suppression system, created a much more challenging condition for the suppression system. However, even in such a severe adverse condition, the fire suppression performance of the CAF system was much better than the water deluge system.

Diesel fuel was used instead of transformer oil in Test #6. The diesel was pre-heated to 32ºC and was allowed to burn for 1 min 17 s before the 3 TAR nozzle CAF system was activated. The CAF system using 2% Class B foam concentrate controlled the diesel fire in 1 min 40 s and extinguished it in 2 min 55 s. Comparing the results of Tests #5 and #6, it shows

that diesel pre-heated to 32ºC with a pre-burn of 1 min 17 s provided a similar fire challenge to the CAF system as the transformer oil pre-heated to 77ºC with a much longer pre-burn of 2 min 26 s. This indicates that diesel provides much more challenging fire than transformer oil.

Tests #7 - #9 used a 2 GDR nozzle CAF system. In Test #7, the diesel was pre-heated to 33ºC, and was allowed a pre-burn of 1 min 17 s. The CAF system using 1% Class A foam concentrate controlled the fire in 56 s and extinguished it in 1 min 40 s. Figures 3.7 and 3.8 show heat flux and temperature readings of Tests #1 and #7. They show a much higher heat flux and temperature at the time of suppression system activation in Test #7, indicating a larger fire in the CAF system test. However, the CAF system extinguished the fire much sooner than the water deluge system. In Test #8, the diesel was pre-heated to 41ºC. The CAF system using 2% Class B foam concentrate controlled the fire in 1 min 30 s and extinguished it in 1 min 45 s. Test #9 used transformer oil instead of diesel. The transformer oil was pre-heated to 75ºC, and was allowed a pre-burn of 1 min 25 s. The CAF system using 2% Class B foam concentrate controlled the fire in 1 min 33 s and extinguished it in 1 min 58 s. Figures 3.9 and 3.10 show heat flux and temperature readings of Tests #1 and #9. They show a much higher heat flux and temperature at the time of suppression system activation in Test #9, indicating a larger fire in the CAF system test. However, the heat flux and temperature dropped sharply with the activation of the CAF system, and the fire was extinguished much sooner than with the water deluge system.

In Test #10, an 8 TAR nozzle CAF system was used. Transformer oil was pre-heated to 75ºC, and was allowed a pre-burn of 1 min 15 s. The CAF system using 2% Class B foam concentrate controlled the fire in 1 min 13 s and extinguished it in 1 min 29 s. Figures 3.11 and 3.12 show heat flux and temperature readings of Tests #1 and #10. Again, they show a much higher heat flux and temperature at the time of suppression system activation in Test #10, indicating a larger fire in the CAF system test. However, the CAF system extinguished the fire much sooner than the water deluge system. Figure 3.13 presents a sequence of pictures showing the extinguishment of fire by the 8 TAR nozzle CAF system.

Table 3.1 Summary of Test Conditions and Results

Test #	1	2	3	4	5	6	7	8	9	10
Description	Deluge	CAF	CAF	CAF	CAF	CAF	CAF	CAF	CAF	CAF
Nozzle type	sprinkler	TAR	TAR	TAR	TAR	TAR	GDR	GDR	GDR	TAR
# of Nozzles	21	4	3	3	3	3	2	2	2	8
Foam Type	none	Class A	Class A	Class B	Class B	Class B	Class A	Class B	Class B	Class B
Foam Concent. (%)	none	1	1	2	2	2	1	2	2	2
Flow Rate (L/min)	910	88	66	66	66	66	160	160	160	160
Fuel	Transformer oil	Transformer oil	Transformer oil	Transformer oil	Transformer oil	Diesel	Diesel	Diesel	Transformer oil	Transformer oil
Pre-heat (ºC)	75	76.5	76	77	77	32	33	41	75	75
Pre-burn time (min:s)	1:20	1:21	1:27	1:20	2:26	1:17	1:17	1:04	1:25	1:15
Application time to suppress (min:s)	2:05	1:09	2:16	0:10	1:21	1:40	0:56	1:30	1:33	1:13
Application Time to Extinguish (min:s)	3:53	1:24*	4:02	0:25	2:54	2:55	1:40	1:45	1:58	1:29

* 1 Pan on side did not receive foam and was left burning

Activation

24 s

80s

125s

Figure 3.1 Fire extinguishment by water deluge system

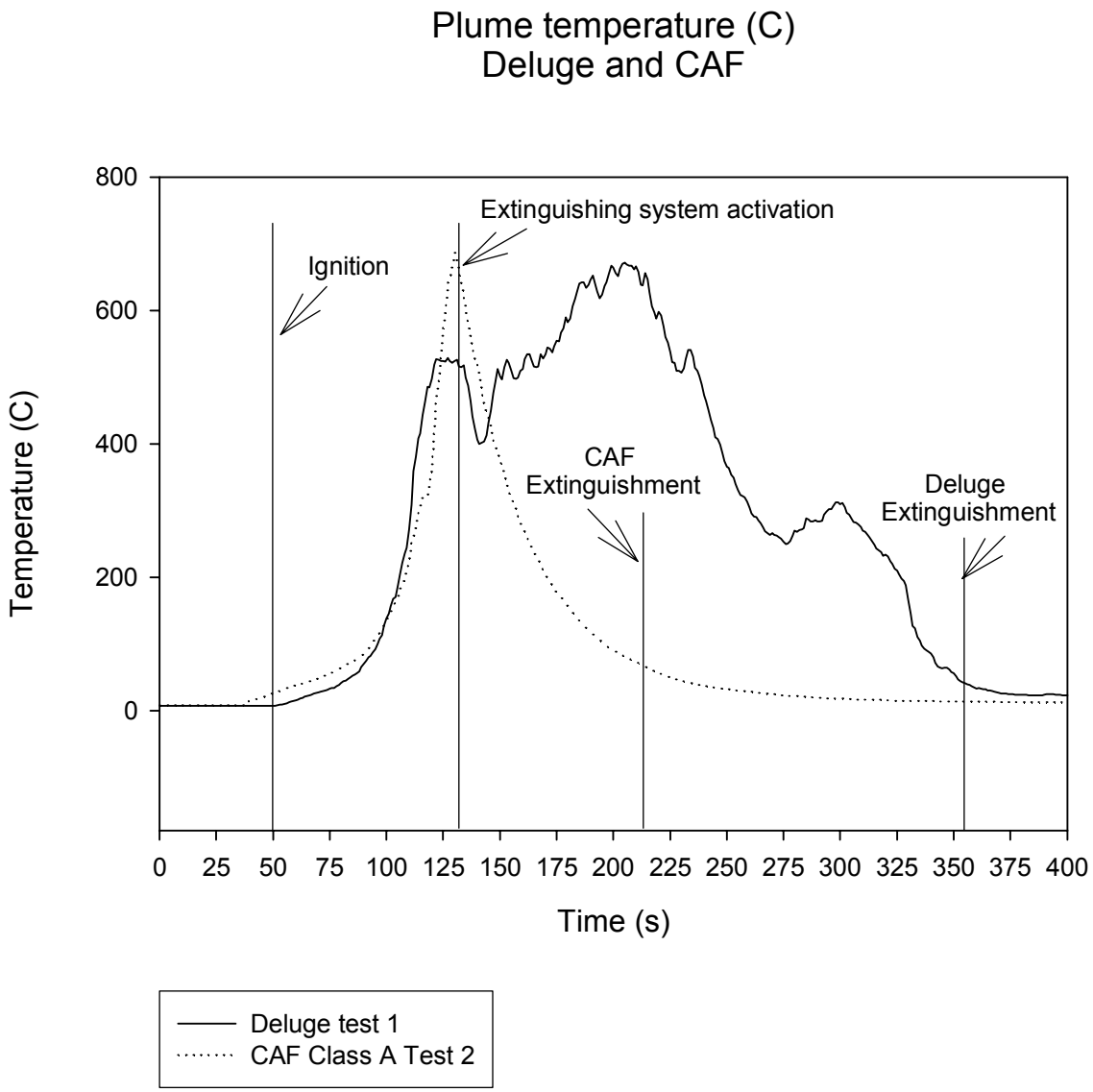

Figure 3.2 Temperature at the top front vs. time (Tests #1 and #2)

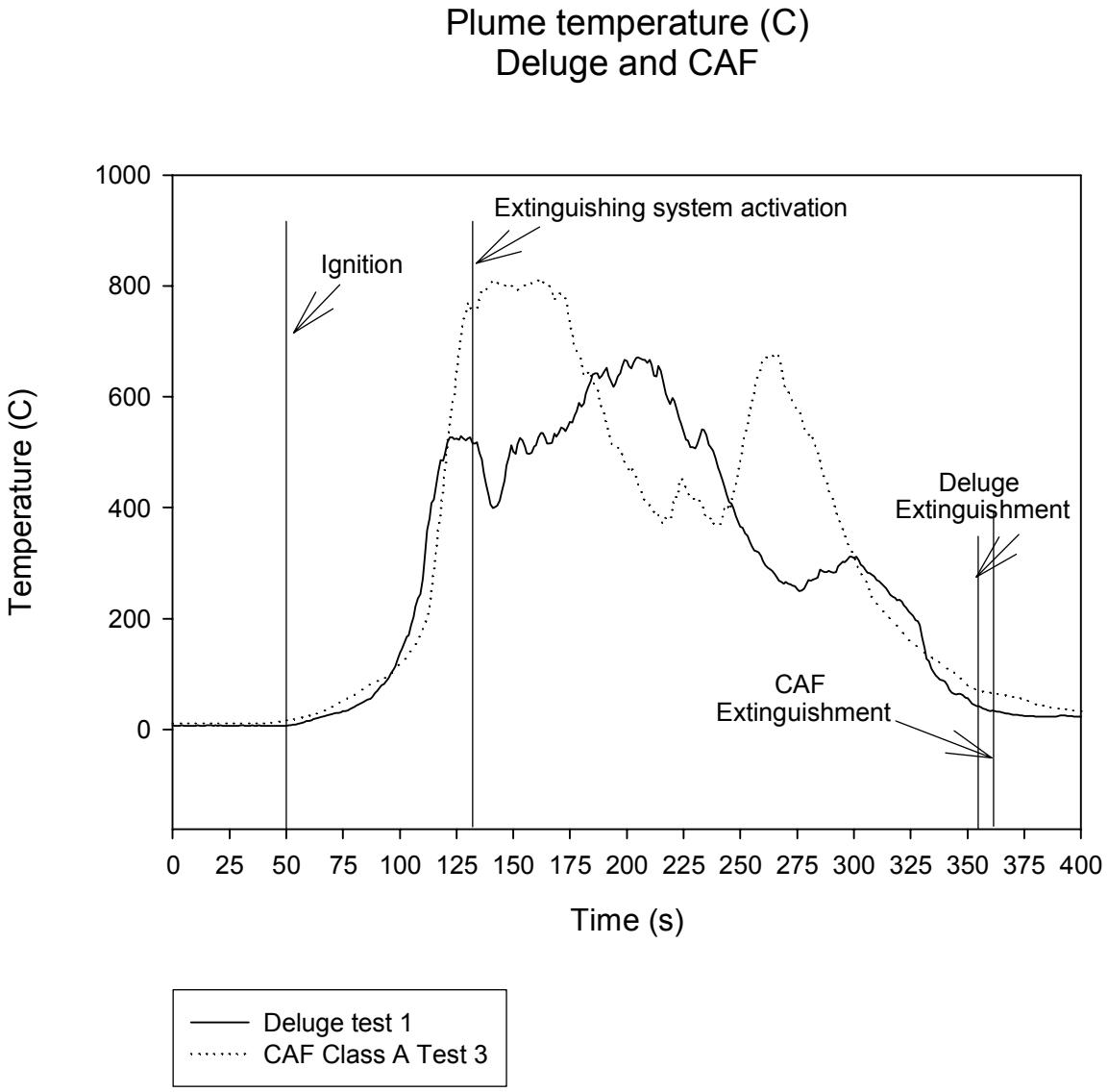

Figure 3.3 Temperature at the top front vs. time (Tests #1 and #3)

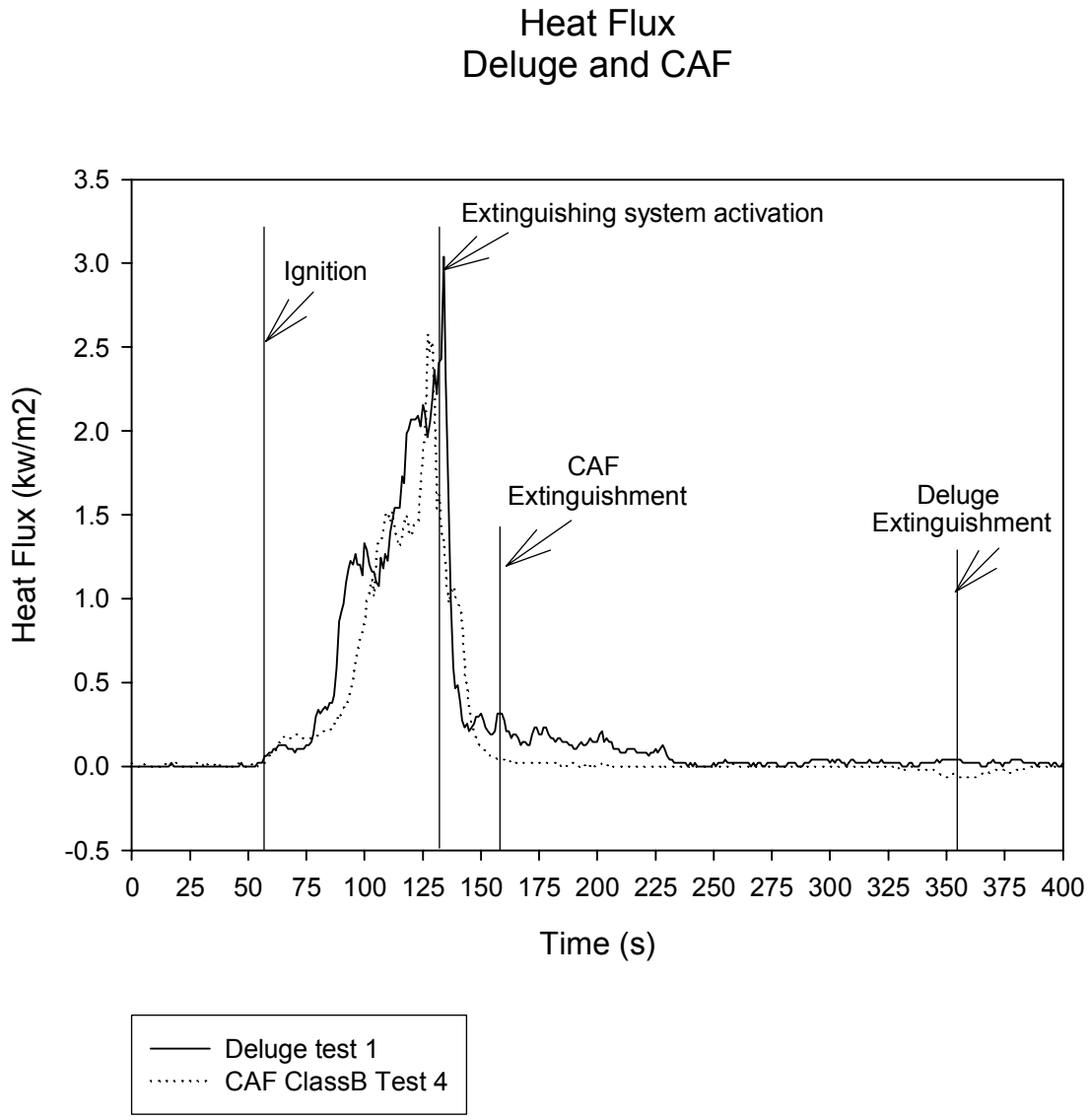

Figure 3.4 Heat flux value vs. time (Tests #1 and #4)

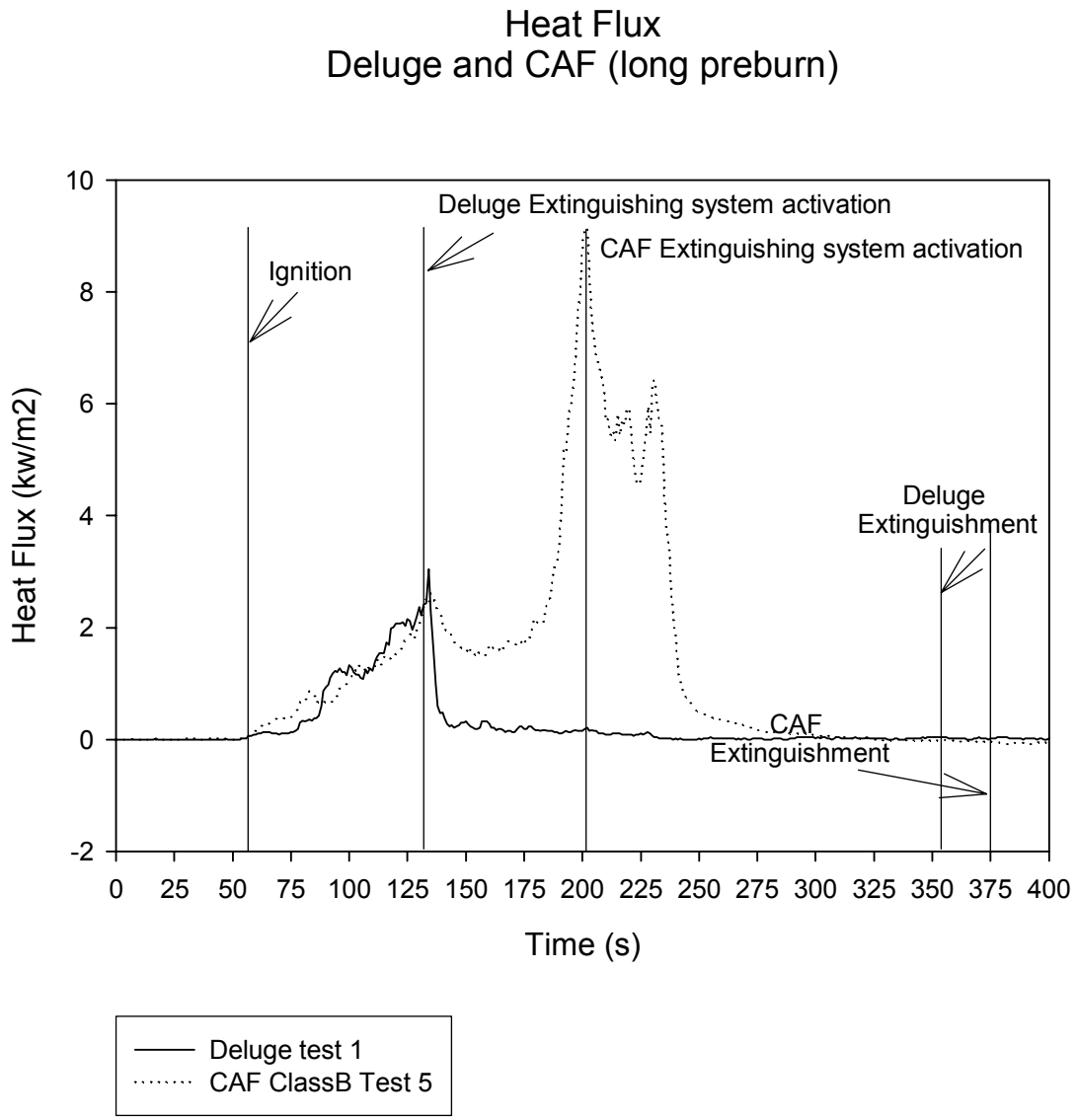

Figure 3.5 Heat flux value vs. time (Tests #1 and #5)

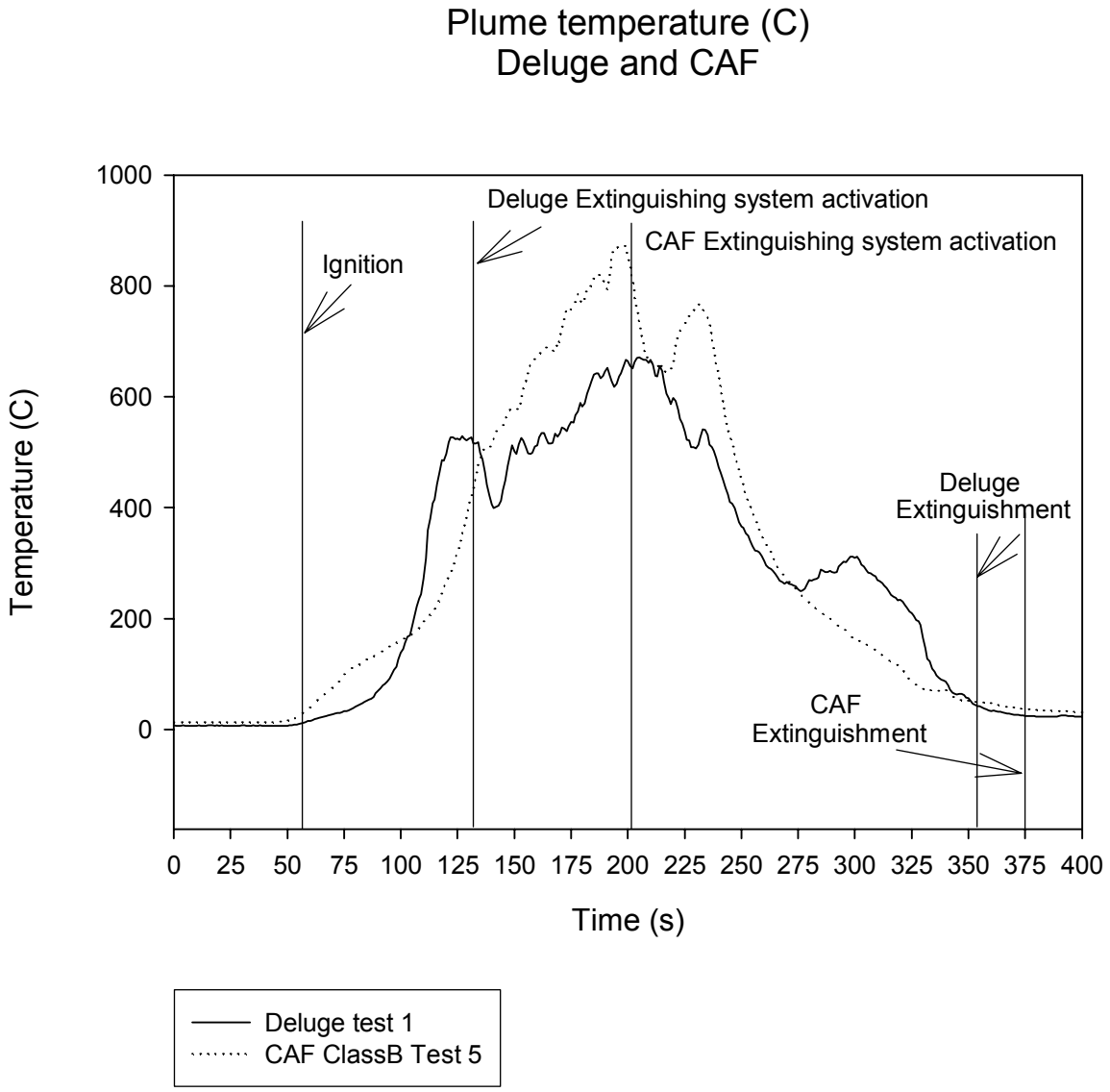

Figure 3.6 Temperature at the top front vs. time (Tests #1 and #5)

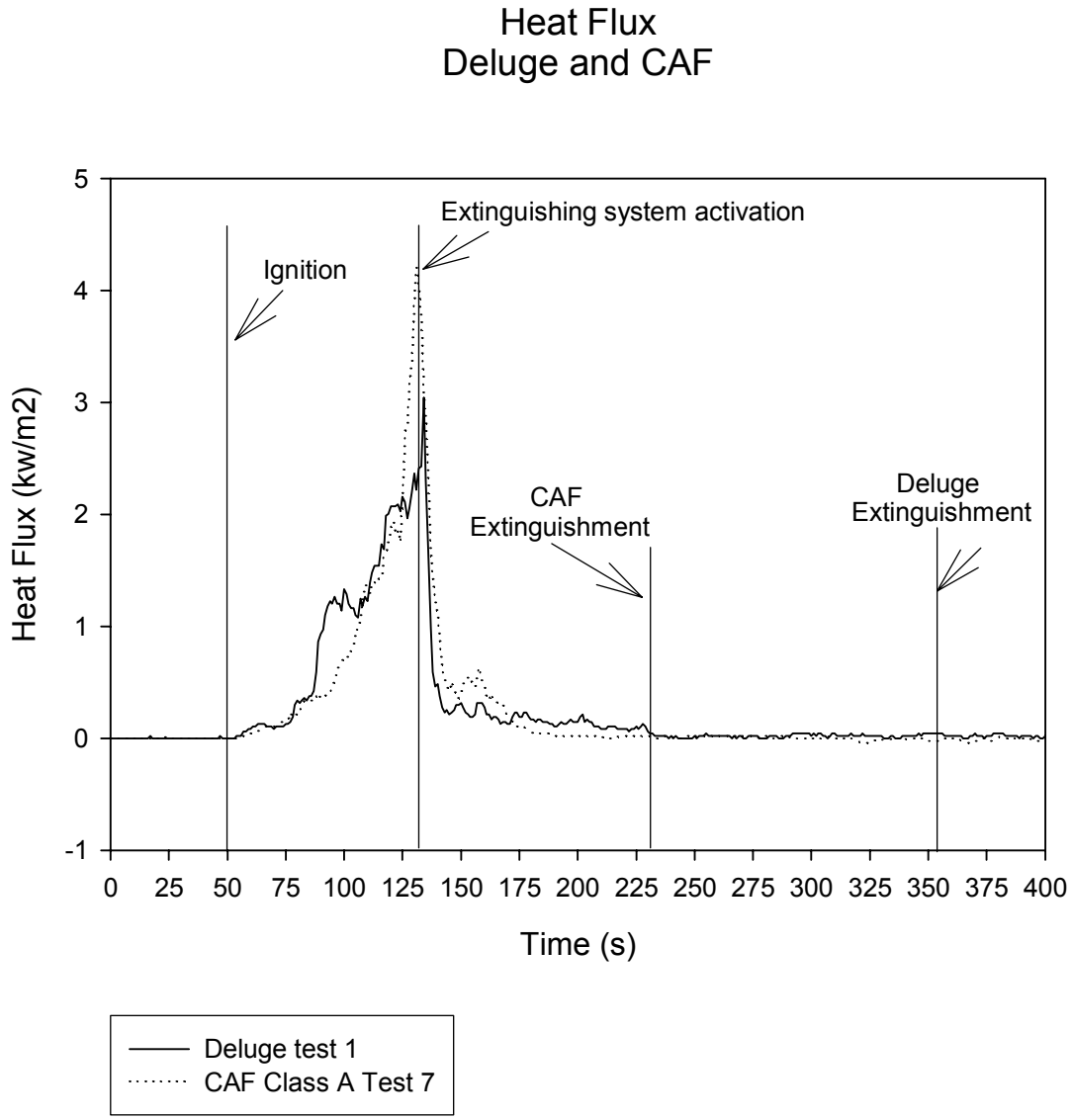

Figure 3.7 Heat flux value vs. time (Tests #1 and #7)

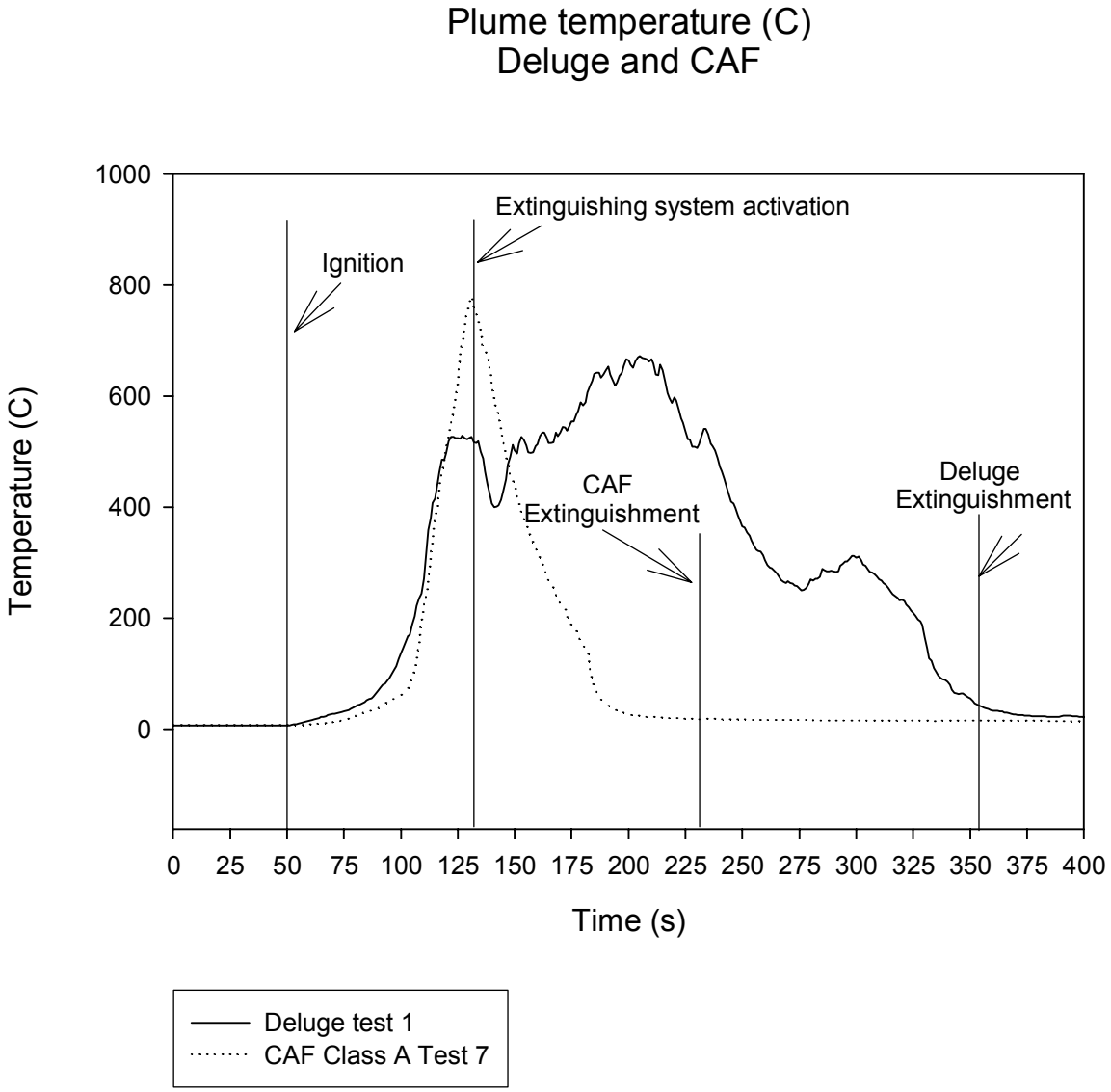

Figure 3.8 Temperature at the top front vs. time (Tests #1 and #7)

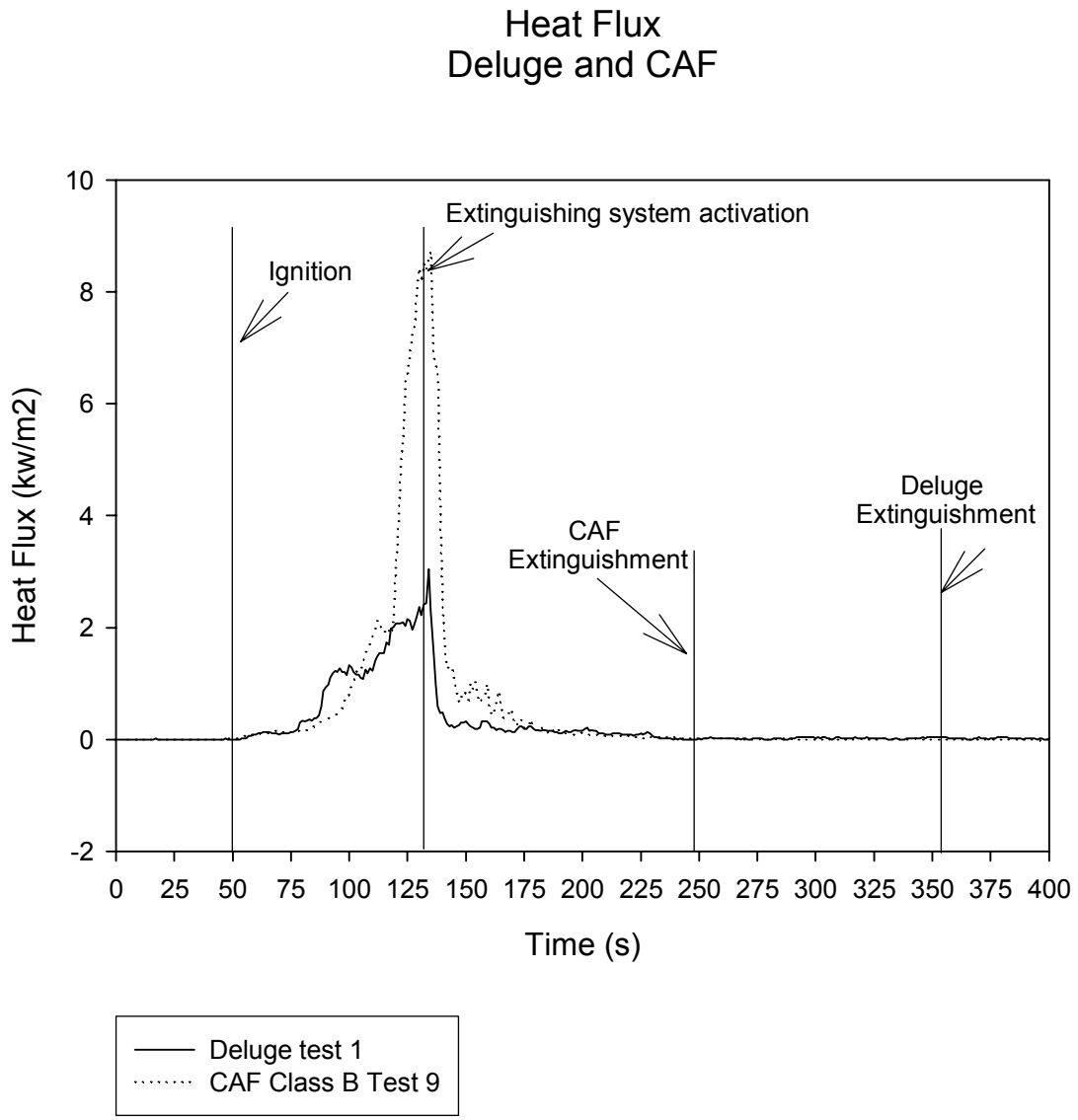

Figure 3.9 Heat flux value vs. time (Tests #1 and #9)

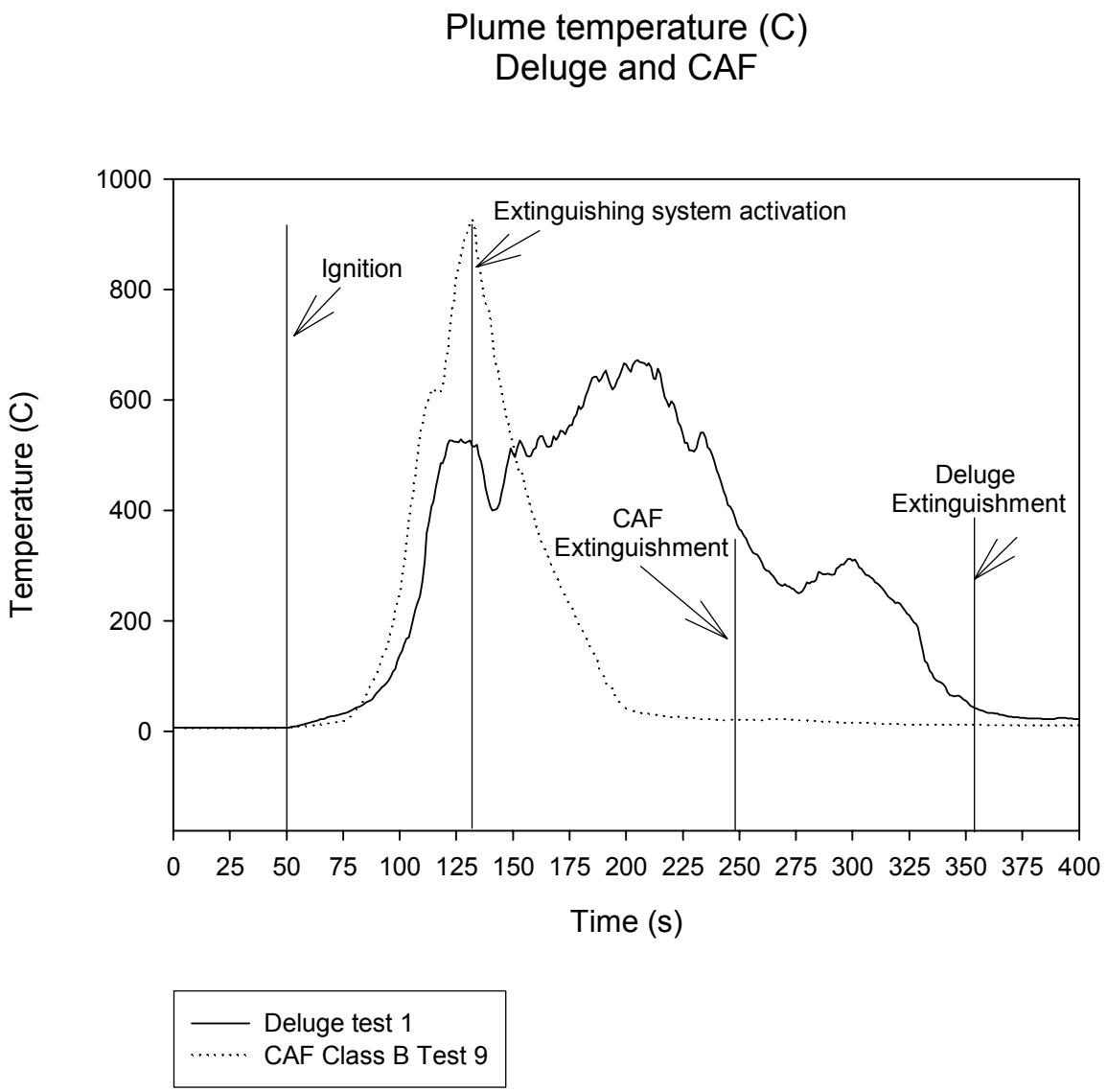

Figure 3.10 Temperature at the top front vs. time (Tests #1 and #9)

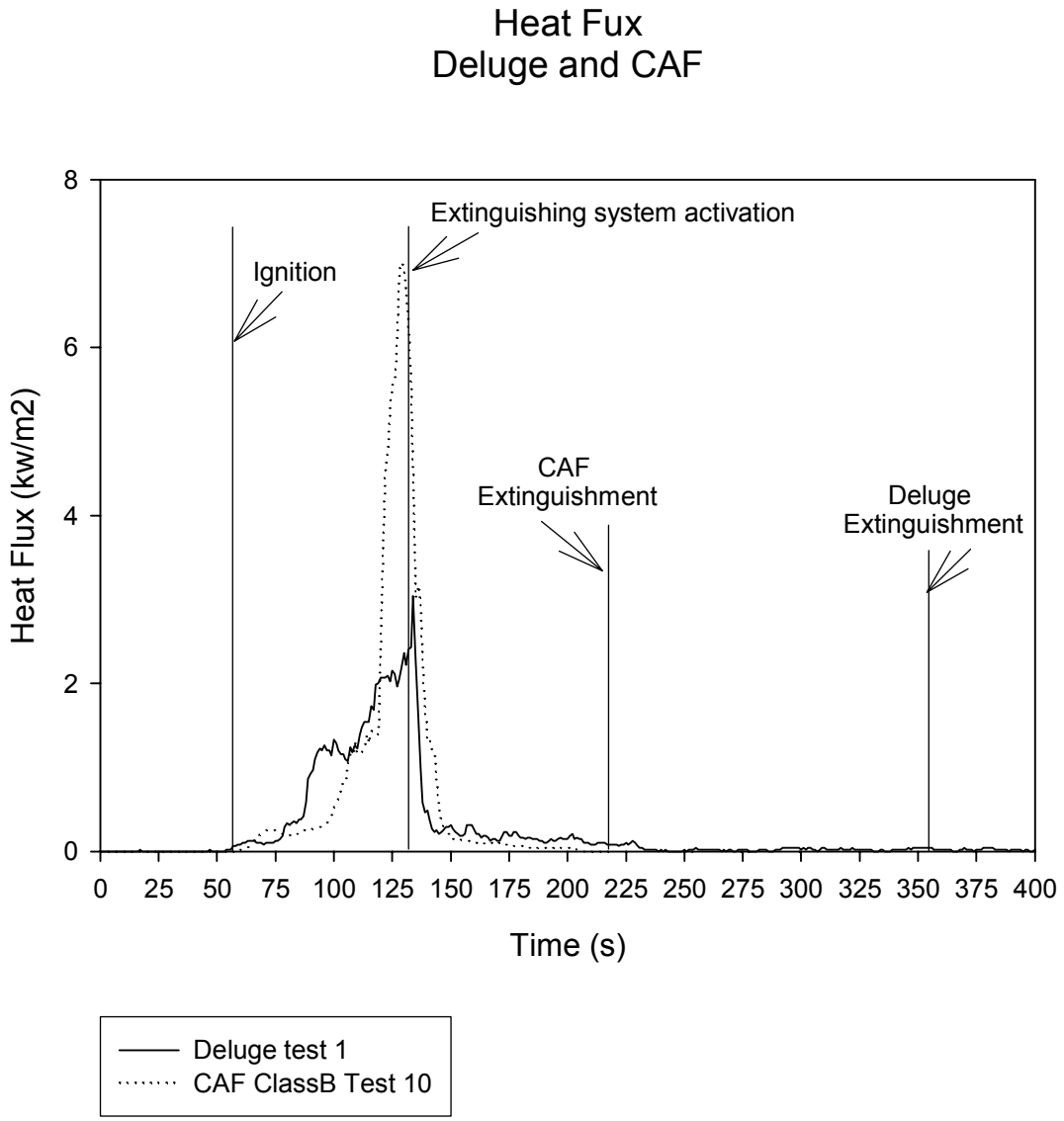

Figure 3.11 Heat flux value vs. time (Tests #1 and #10)

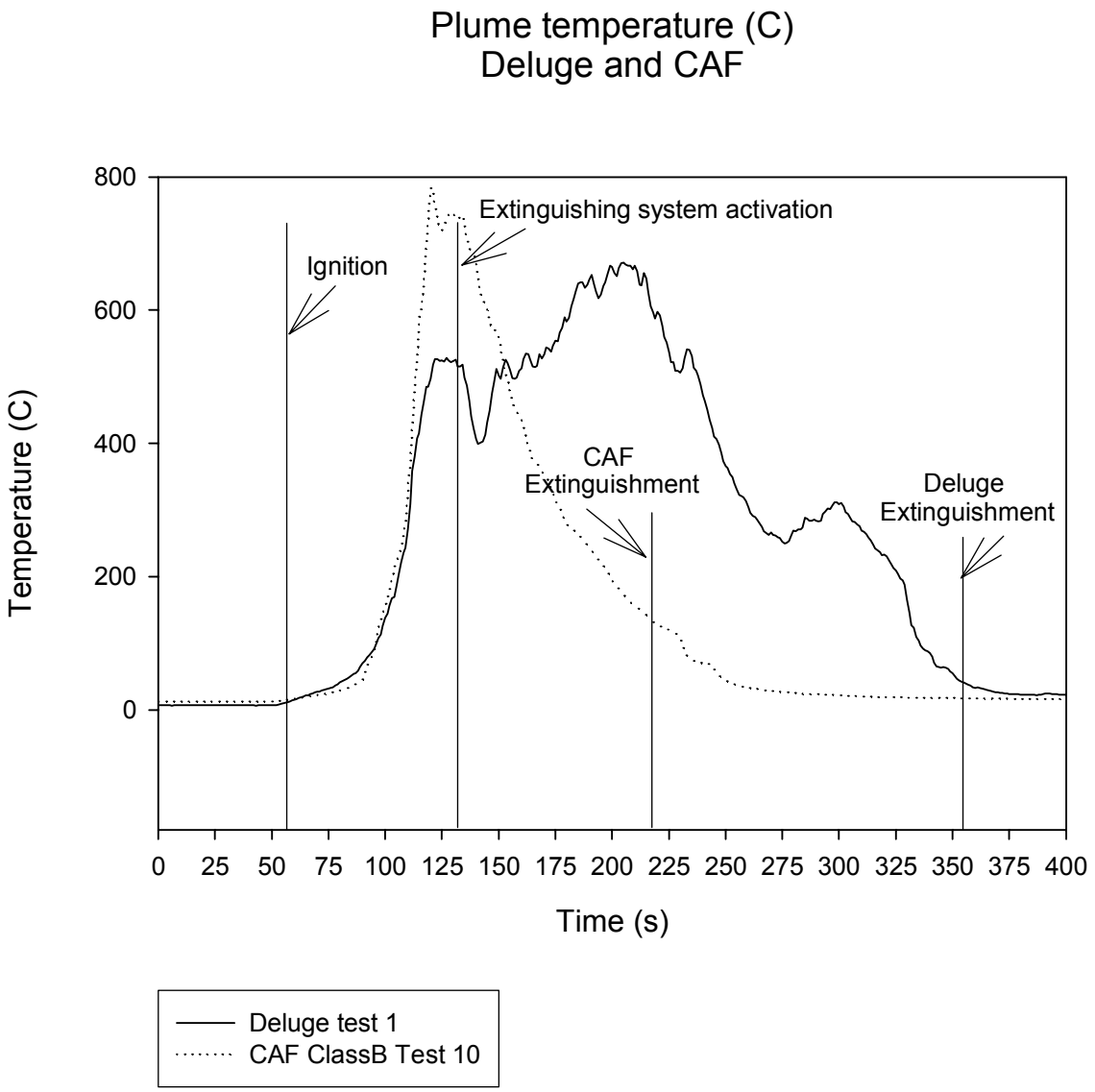

Figure 3.12 Temperature at the top front vs. time (Tests #1 and #10)

Activation

22s

68s

89s

Figure 3.13 Fire extinguishment by 8 TAR nozzle CAF system

4.0 CONCLUSION

The experimental study was carried out to develop a CAF distribution system and to evaluate the fire suppression capability of the CAF system for the protection of power transformers. CAF systems with 3 or 4 TAR nozzles and with 2 GDR nozzles were developed for uniform distribution of foam on the test mock-up, which represents a one half section of a power transformer. Also, a series of full-scale fire tests was conducted to measure the effectiveness of water deluge and CAF systems in extinguishing a large simulated power transformer fire, using Class A and Class B foam concentrates.

The study showed that the CAF system, either with 2 large GDR nozzles or with 3 or 4 small TAR nozzles, performed much better than the water deluge system with 21 sprinkler heads. The CAF system with 3 TAR nozzles using 1% Class A foam concentrate extinguished the test fire in 4 min 2 s, which is almost the same as the results of the water deluge system. However, the 3 TAR CAF system used less than 8% of the total water flow rate of the water deluge system. The extinguishment time of the 3 TAR nozzle CAF system with 2% Class B foam concentrate was 25% shorter than the extinguishment time of the water deluge system, using less than 8% of the total water flow rate of the water deluge system.

The CAF system with 2 GDR nozzles using 2% Class B foam concentrate extinguished the test fire in 1 min 58 s, which is almost one half of the extinguishment time of the water deluge system. And, the water usage was less than 18% of the total flow rate of the water deluge system. With 1% Class A foam concentrate, the 2 GDR CAF system performed similarly (one half the extinguishment time with 82% less water than the water deluge system).

The CAF system with 8 TAR nozzles using 2% Class B foam concentrate extinguished the test fire in 1 min 29 s, with far less water requirement than the water deluge system. The study clearly shows that a CAF system can provide necessary fire protection for power transformers, more effectively with much less water requirement, compared to a traditional water deluge system.

5.0 ACKNOWLEDGEMENT

Authors would like to acknowledge the assistance of Michael Ryan in conducting the tests. Authors would also like to express deep appreciation to Mr. Jean-Pierre Asselin and Mr. Raymond Quenneville of Fire Flex Systems Inc. for their assistance in the CAF testing.

Integrated Compressed Air Foam Systems for Fixed Piping Networks

ICAF Case Study Series:

Protection of High Voltage Power Transformers

Doc. FM-072M-0-216 A

May 2006

Overview

In our modern societies we are using a lot of technology in our day to day life to the point where we have grown to be totally dependent upon electrical power, both in our private lives and in most commercial or industrial activities.

Power utilities have installed power substations in their distribution grids to accommodate the ever increasing demand for dependable power with their rows of large high voltage power transformers. Many precautions are taken to safeguard them against failure because when all power fails, customers complain, revenues are lost and medical emergencies can even happen.

One of the risks these large transformers are subjected to is fire. Although the manufacturers of these oil filled transformers are building them with many imbedded safety features, when they fail they often produce very large fires that are very hard to extinguish and provoke environmental damages by the release of thick black toxic smoke and spilling of transformer oil.

This is why more and more utilities are installing fire protection systems to protect their investment and to prevent such fires. Containment curbs and runoff water catch basins are also built around the transformers to prevent oil spills in case of problems.

Problems with the use of traditional technologies

When they are protected, most high voltage power transformers are with a deluge sprinkler system and designers use NFPA-15 as a guide to design a system that will cool off the transformer and eventually, extinguish the fire.

Typical design calls for a grid of open type deluge/spray nozzles to be installed all around the transformer. A typical system will use about 44 of them and will be designed to spray about 500gpm of water for a duration of one (1) hour. That is a lot of water !

NFPA-850 for Power Plant Design goes even farther, requesting water spray duration to last a full two (2) hours ! But minimum provisions for drainage are specified to be only large enough to contain the spill from the largest single container of any flammable or combustible liquid in the area and for fixed fire suppression systems operating for a minimum of 10 minutes !

A lot of power substations are located in remote areas, or on the outskirts of towns where water is often not readily available in these large quantities. Water reservoirs have to be built (often underground) to accommodate this large demand. They require an initial investment that is fairly high for the utility company and they also need regular maintenance, factors that are rarely included in the fire protection contractor's proposal.

Even when water is available in these quantities, powerful fire pumps will be needed to provide water at a sufficiently high pressure to achieve the goals of the fire protection system. Infrastructure costs for the utility company rise rapidly, to the point where some of them don't protect their transformers at all and will simply provide passive protection measures such as firewalls.

Then, when a fire happens, so much water is discharged by the fire department on the flaming transformer to cool it and control the fire that soon, the curbs built around it overflow and hot transformer oil is spilled around, compounding the problem with the possibility of burn back and now creating an environmental problem that also has to be dealt with.

Design with ICAF

A solution to these problems is now available using FireFlex Systems ICAF Integrated Compressed Air Foam system for fixed piping network.

This new FM Approved AFFF foam system allows the designer to alleviate many of these potential problems while providing superior fire protection (AFFF stands for Aqueous Film Forming Foam and is a fire fighting foam widely used in the industry to extinguish fires in hydrocarbon fuels such as transformer oil).

NFPA-11, TIA #05-1 in art. 7.15.1 states that where fixed spray type systems are used to protect 3 dimensional equipment like power transformers, the minimum density shall be applied over the projected area of rectangular prism envelope for the equipment and its appurtenances. Furthermore, system discharge duration shall be designed for a minimum period of 5 minutes (art. 7.16).

Using FireFlex Systems FM Approved ICAF Design Manual, the designer will locate a grid of local application nozzles to cover the transformer's surfaces, based of the published square area of coverage versus mounting distance ratio of the TAR-225L Nozzles. But because of the coverage area of each nozzle and the dense texture of Compressed Air Foam, the spray nozzles grid all around the transformer uses much less nozzles than the equivalent deluge system.

ICAF® Compressed Air Foam Systems

The quantity of foam concentrate is also reduced by using the ICAF Systems since its high efficiency is achieved while using only a 2% concentration of AFFF foam concentrate instead of the usual 3% !

For a typical high voltage power transformer such as the one shown in Figures 1 & 2 below, ICAF Systems are designed at the much lower water flow rate of 95gpm and will need a grid of only 16 nozzles. Because of the much shorter discharge time of 5 minutes, the total water quantity will be dramatically reduced; only about 475 gallons of water will now be needed to completely suppress the fire while providing protection against burn-back, which deluge systems cannot do.

Immediately, one can see that the need for large reservoirs, pumps, containment dikes etc. is not necessary anymore and the utility company is now making large savings, while having a much more efficient fire protection system protecting its investment.

This small amount of water, foam and transformer oil can now be easily pumped after a fire and treated. Possibilities of damages to the environment are much reduced because the risk of overflowing water and transformer oil over the containment curb is eliminated.

Water requirements comparison table:

	Deluge System	ICAF System
Number of Nozzles	44	16
Water Flow	500 gpm	95 gpm
Drainage Required	5,000 gals (10 min.)	475 gals (5 min.)

Project Scope of Work

Typically, a power transformer fire will involve both a cascading fire from the oil coming from the expansion tank situated at the top of the casing and a pool fire in the curb surrounding the transformer, which makes them very difficult to extinguish.

Figure 1 below shows a typical ICAF System installation with its grid of discharge nozzles installed around the transformer. A first row of nozzles will be aimed at the top of the transformer casing to extinguish flames from the pooling transformer oil on the top of the transformer casing. A second row will be installed as shown to protect the sides of the transformer casing, extinguishing the cascading fire. Foam accumulation in the curb will handle the burning oil by covering the surface. Other nozzles as shown will be located to properly cover the shape of the oil expansion tank.

Figure 1 – Detail of the nozzles grid around a typical transformer:

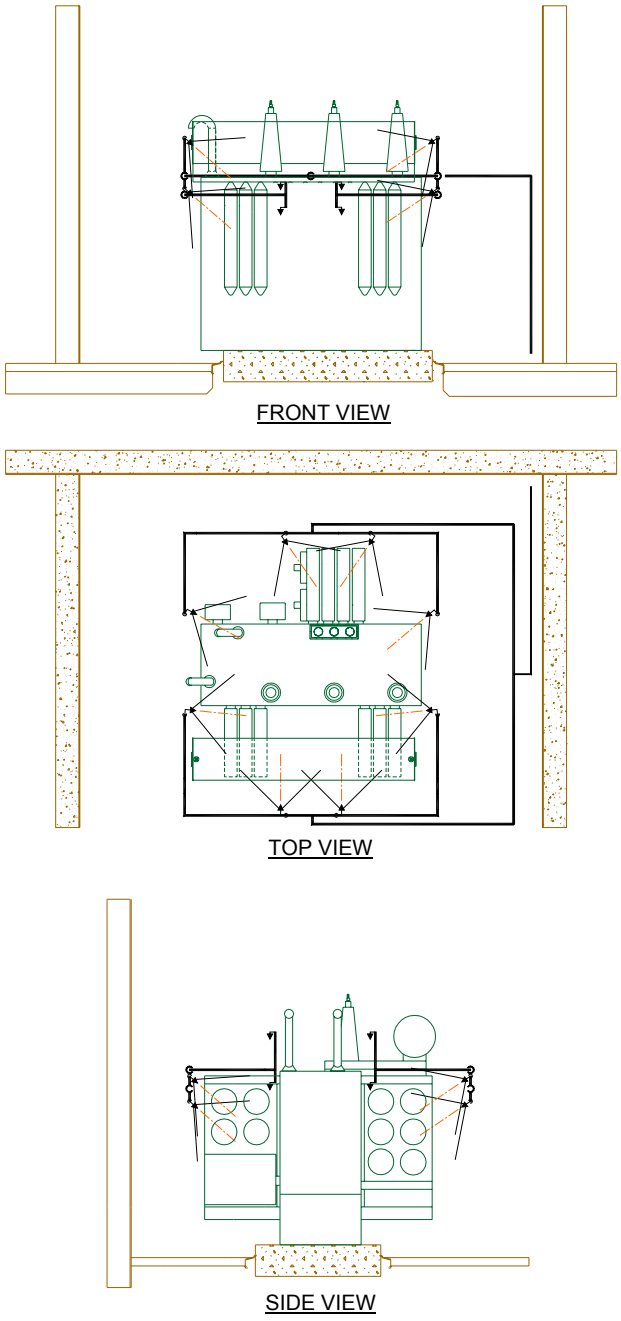

Figure 2 – 3D view of a typical ICAF balanced piping grid:

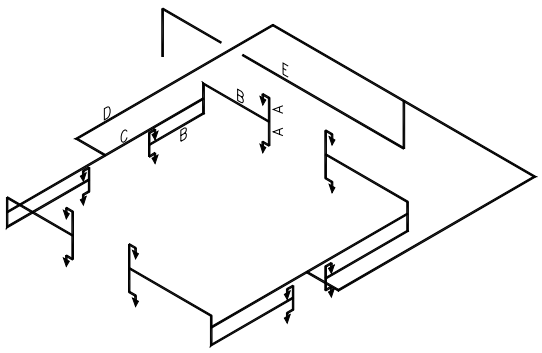

As shown above, the resulting balanced flow piping is much simpler to install and of smaller diameter than the equivalent deluge grid system, reducing the costs for the installing contractor.

The ICAF System itself also has a small footprint (see Figure 3 below) and can even be skid mounted for more flexibility. The foam concentrate is stored in a non-pressurized tank of only 10 gallons capacity and does not use bladders or complicated inductors and trims. The entire foam trim is actually factory-built in a user-friendly cabinet !

A bank of three high pressure compressed air cylinders is supplied to provide the pressure to the system so the existing water pressure can be used to feed the system.

Figure 3 – Foot print of a typical transformer ICAF System.

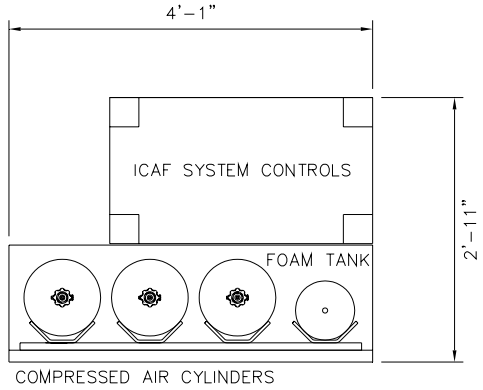

Conclusions

Fire protection designers now have an additional weapon in their arsenal of fire combat tools. The ICAF technology is emerging as an environmentally friendly solution for protection of power transformers and other similar hazards.

Special considerations need to be given to the nozzle layout for this kind of hazard since power transformer configurations vary. ICAF Systems are so efficient at extinguishing this type of fire, full-scale fire tests have demonstrated total suppression will be achieved three times faster than a typical deluge system !

With ICAF Systems installed in their power plants, utilities can now better protect their investment while achieving quicker and total suppression in case of accidental fires.

Should you have questions regarding this application or any other involving flammable liquid hazards, contact FireFlex Systems Inc. Our engineers will work the project with you and find the best layout for your specific application.

FireFlex Systems Inc.
1935 Lionel-Bertrand Blvd.
Boisbriand, QC, Canada J7H 1N8
T: 450-437-3473 Toll free: (866) 347-3353
Fax: (450) 437-1930

For additional information about ICAF Systems, please visit our web site at: **http://www.fireflex.com**

VIKING®

TECHNICAL DATA

DELUGE SYSTEM

The Viking Corporation, 210 N Industrial Park Drive, Hastings MI 49058
Telephone: 269-945-9501 Technical Services 877-384-5464 Fax: 269-818-1680 Email: techsvcs@vikingcorp.com

1. DESCRIPTION

A Deluge System is a fixed fire-protection system which totally floods an area with pressurized water through a system of piping and open nozzles or sprinklers. The system piping is empty until the deluge valve is activated by a hydraulic, pneumatic, electric or manual release system.

2. APPLICATIONS

Regular deluge systems may be required to protect extra-hazard occupancies by creating a fire buffer zone or by cooling surfaces to prevent deformation or structural collapse. *Examples:* storage or process areas containing substances having a low flash point; areas in which fire may spread rapidly; tanks containing combustible solutions, transformers, equipment pits or product handling systems. Systems should be designed by qualified fire-protection engineers in conjunction with the approving bodies having jurisdiction.

Foam-water deluge systems are those using foam-water sprinklers or spray nozzles and an air-foam concentrate which is introduced into the water at controlled rate on the system side of the deluge valve. Foam water systems are used to control and/or extinguish fires which require a smothering and cooling agent. *Examples:* extraction plants, aircraft hangars and areas where flammable-liquid spill fires may occur.

3. OPERATION

The Viking deluge valve prevents water from entering the system piping until required. The deluge valve is kept closed by a pressurized upper valve chamber. The pressure is maintained through a restriction on the service side. This upper chamber is also connected to the release line. When the pressure is relieved from the upper chamber through the release line, the clapper is lifted by the water pressure under the clapper. Water floods the system and rings alarm. For complete operation of individual Viking devices, see the applicable device pages in the Engineering and Design Data Book.

Viking Technical Data may be found on The Viking Corporation's Web site at http://www.vikinggroupinc.com. The Web site may include a more recent edition of this Technical Data Page.

4. INSPECTIONS, TESTS AND MAINTENANCE

Refer to NFPA 25 for Inspection, Testing and Maintenance requirements.

5. AVAILABILITY

Viking deluge system componenets are available through a network of domestic and international distributors. See The Viking Corporation web site for the closest distributor or contact The Viking Corporation.

6. GUARANTEE

For details of warranty, refer to Viking's current list price schedule or contact Viking directly.

VIKING®

TECHNICAL DATA

DELUGE SYSTEM

The Viking Corporation, 210 N Industrial Park Drive, Hastings MI 49058
Telephone: 269-945-9501 Technical Services 877-384-5464 Fax: 269-818-1680 Email: techsvcs@vikingcorp.com

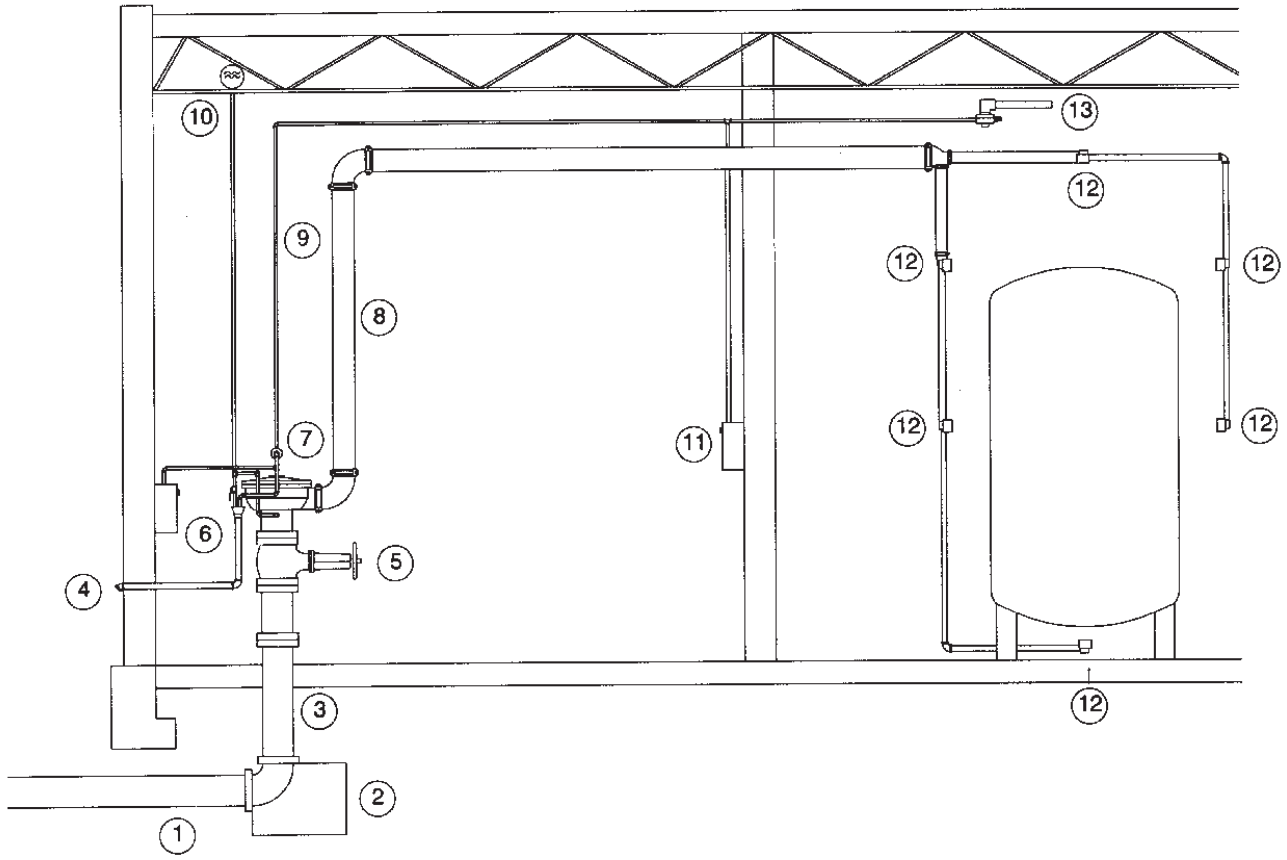

Figure 1

TABLE 1

Item	Description	Item	Description
1	Supply Main	8	System Piping
2	Thrust Block	9	Release System Piping
3	Riser to System	10	Water Motor Alarm
4	System Main Drain and Flow Test Drain	11	Emergency Release
5	OS&Y Supply Control Valve	12	Spray Nozzles
6	Emergency Release	13	Thermostatic Release
7	Deluge Valve with Required Trim and Release Equipment		

VIKING®

TECHNICAL DATA

DELUGE SYSTEM DESIGN

The Viking Corporation, 210 N Industrial Park Drive, Hastings MI 49058
Telephone: 269-945-9501 Technical Services: 877-384-5464 Fax: 269-818-1680 Email: techsvcs@vikingcorp.com

1. DESCRIPTION

A Deluge System is an empty pipe system that is used in high-hazard areas or in areas where fire may spread rapidly. It can also be used to cool surfaces such as tanks, process lines, or transformers. In this type of application, open sprinklers or spray nozzles are employed for water distribution. The deluge valve is activated by a release system (manual, fixed-temperature, rate-of-temperature rise, radiation, smoke, or combustion gases, hazardous vapors, pressure increase). When the system is tripped, water flows through all spray nozzles or sprinklers simultaneously. The Viking deluge system can be activated by a hydraulic, pneumatic, electric, or manual release system or any combination of these release systems. But, in all cases, the deluge valve itself is activated hydraulically. See the following schematics and the "Equipment" section of the Viking Engineering and Design Data book for complete information regarding individual devices. System design requirements are to be found in rules set forth by various groups including the National Fire Protection Association (NFPA), FM Global (FM), Industrial Risk Insurers (IRI), Loss Prevention Council (LPCB), and the Authorities Having Jurisdiction. Deluge systems require hydraulically-calculated piping.

2. EVALUATION OF THE DESIGN PROBLEM

- When designing a deluge system for a particular installation, consideration must be given to the following:
- Type of hazard
- System's overall purpose
- Approvals required, published standards, and job specifications
- Area to be protected by one deluge system
- Water supply
- Drainage
- Floatable combustible liquids
- Equipment shut-down
- Corrosive atmospheres
- Draft curtains
- The necessity of explosion-proof electrical equipment
- Appropriate equipment

A. TYPE OF HAZARD

Efforts should be made to acquire specific information regarding the hazard to be protected. This information is essential to apply the appropriate standards.

B. SYSTEM'S OVERALL PURPOSE

Given the type of hazard to be protected, determine the purpose and the desired performance characteristics of the system. Should it be designed to cool surfaces only? To extinguish fires only? Or, to both cool surfaces and extinguish fires? Also, determine if water additives such as low-expansion foam and AFFF water wetting agents are required to meet the stated purpose of the system. If so, also refer to the Viking Foam Systems Engineering Design Data book.

C. APPROVALS REQUIRED, PUBLISHED STANDARDS, AND JOB SPECIFICATIONS

Among those things affecting the system design are:

1. Approvals required by various groups. For example: Insurance standards, owner, local and national building codes, insurance underwriter, consulting engineer, and architect.
2. Standards set forth in various publications. For example:
   a. National Fire Protection Association's National Fire Codes - and Fire Protection Handbook.
   b. FM Global's Loss Prevention Data.
   c. Loss Prevention Council rules for Automatic Sprinkler Installation.
3. Job specifications. These should be evaluated to make certain they comply with all rules stipulated by the approval bodies.

D. AREA TO BE PROTECTED BY ONE DELUGE SYSTEM

Some installation standards state that a discharge rate of 3,000 gpm (11 355 L/min) should not be exceeded for a single system. System size may be further limited by the water supply available to the system and/or the hazard classification. If there is any question concerning the adequacy of the deluge system's coverage, seek the advice of the insurance underwriter or a qualified consulting engineering firm.

E. WATER SUPPLY

Since deluge systems are hydraulically-calculated, the static and residual water-pressure characteristics of the water supply should be obtained by conducting an on-site water-flow test. Prior water-supply data may already be available from the following sources: job specifications, consulting engineer, architect, insurance underwriter, owner, or local water department. Prior data must be applicable and may need to be verified. If a fire pump is needed, acquire a pump supply curve from the pump manufacturer. However, be sure to check with authorities having jurisdiction (approving body) regarding pump characteristics (percentage over rated capacity at percentage of rated psi).

VIKING® TECHNICAL DATA DELUGE SYSTEM DESIGN

The Viking Corporation, 210 N Industrial Park Drive, Hastings MI 49058
Telephone: 269-945-9501 Technical Services: 877-384-5464 Fax: 269-818-1680 Email: techsvcs@vikingcorp.com

F. DRAINAGE

A deluge system may produce a large volume of water. The owner should be notified as early as possible concerning the total volume of water expected to ensure proper drainage and, where necessary, collection.

G. FLOATABLE COMBUSTIBLE LIQUIDS

If the area being protected contains a large volume of floatable combustible liquid, a safe drainage or diking system should be installed to prevent the possibility of transferring the fire to adjacent areas.

H. EQUIPMENT SHUT-DOWN

Because a deluge system applies water to the total system areas simultaneously, it may be advisable to install equipment that will automatically shut down selected production equipment. Examples of equipment that might be automatically shut down during deluge system operation are:

1. Equipment prone to more severe water damage when “ON” than “OFF”.
2. Pumps, pipe lines, and conveyers supplying combustible solids, liquids, or gases to the system area.
3. Equipment that would present a serious electrical hazard if exposed to water (e.g. transformers, generators, conveyers, high-capacity battery chargers, high-amperage motors, etc.)
4. Large-volume air handling systems, if the drafting they create would serve to spread the fire to adjacent areas.

I. CORROSIVE ATMOSPHERES

Request information from the owner or owner’s representative regarding the system’s environment. Corrosive elements may be present in the system’s area requiring a special protective coating for all deluge system components. **Note:** For outside exposed piping or where corrosive atmospheres exist, use steel/galvanized pipe and steel malleable or ductile iron fittings or copper.

J. DRAFT CURTAINS

Draft curtains may be required to separate each deluge system when multiple systems serve a common roofed area. The draft curtains suppress the operation of any system adjacent to the system serving the fire area. Proper placement of draft curtains will prevent the unnecessary use of water otherwise needed to fight the fire.

K. EXPLOSION-PROOF ELECTRICAL EQUIPMENT

If the system protects areas where explosive vapors may be present, explosion-proof electrical equipment is required. Check with the owner or other authorities regarding ratings.

L. EQUIPMENT SELECTION

1. GENERAL

Viking deluge equipment is designed to allow for a variety of release devices. The release system detection device itself may be thermostatic (fixed-temperature/rate-of-temperature-rise) or manual. When the detection device is activated, the deluge valve is tripped.

Note: Because the deluge valve is hydraulically operated, it must not be exposed to freezing temperatures. A heated enclosure may be required.

a. Hydraulic Release Systems

1. **Description (refer to data page 203a-i).** Hydraulic release systems may utilize rate-of-temperature rise, fixed-temperature, manual releasing devices, or combinations thereof. Hydraulic release systems are normally the least expensive of possible release systems; however, they must not be installed in areas that are subject to freezing. Under certain conditions, when using a hydraulic release system, the deluge valve may be subject to water columning. See paragraph below titled: MAXIMUM ALLOWABLE HEIGHT OF RELEASE LINE ABOVE THE DELUGE VALVE .
2. **Hydraulic Release System Design**

   — Release Lines —

   Use galvanized steel pipe or corrosion-resistant tubing, such as copper or brass for release lines. Do not exceed 1,000 ft. (304.8 m) of ½” (15 mm) pipe in a release-line system. In systems over this capacity, larger pipe sizing is required.

   — Maximum Allowable Height Of Release Line Above The Deluge Valve —

   Hydraulic release system piping must not exceed the maximum elevation allowed for hydraulic release piping above the Deluge Valve. Refer to current Technical Data for the Viking Deluge Valve used.

b. Pneumatic Release Systems

1. **Description (refer to data page 202a-i).** Pneumatic Release systems may utilize rate-of-temperature-rise, fixed-temperature, manual releasing devices, or combinations thereof. Pneumatic Release systems may be used in most areas. Costs of installation and maintenance are usually higher than a comparable hydraulic release system. Valve trip-time may vary depending on the length of the release line and the air pressure maintained on the release system.
2. **Pneumatic Release System Design**

   — Pressure to be maintained in a Pneumatic Release System —

   For recommended pneumatic (air or nitrogen) pressures to be maintained in pneumatic release systems, refer to cur-

The Viking Corporation, 210 N Industrial Park Drive, Hastings MI 49058
Telephone: 269-945-9501 Technical Services: 877-384-5464 Fax: 269-818-1680 Email: techsvcs@vikingcorp.com

rent Viking Technical Data for the system used. For additional information concerning pneumatic release system equipment, devices, and installation instructions, refer to the *Viking Engineering and Design Data* book section describing Pneumatic Supplies.

— Release Line Restriction —

All pneumatic-release systems must be equipped with a restricted orifice in the air or gas supply to ensure that the automatic air supply cannot replace pneumatic pressure as fast as it escapes when a releasing device operates. This restriction is already incorporated in the Viking air maintenance device and release line air supply assembly.

— Reducing Trip Time —

If the deluge system trip time is excessive, it can be substantially reduced by one or more of the following:

a. Add a check valve (Circle Seal or equivalent) in branch portions of the release-line system. (Install so flow is toward releasing device).
b. Install an optional accelerator on the pneumatic release system to provide earlier alarms and/or allow the system to trip faster. An Accelerator may be necessary to meet system discharge time requirements.

— Release Line Dehydrator —

All pneumatic release systems must be provided with an air dehydrator to minimize corrosion and prevent ice plugs.

— Pneumatic Supply —

Refer to Viking Technical Data, System Data, and associated schematic drawings for the deluge system used. Also, refer to the *Viking Engineering and Design Data* book section describing “Pneumatic Supplies” for additional information on pneumatic (air or nitrogen) equipment, devices, and installation requirements.

c. Electric Release Systems

1. **Description (refer to data page 204a-h).** Electric release systems may be rate-of-temperature-rise, fixed-temperature, manual, products of combustion, light, or combinations thereof, and may be used in most areas. Installation and maintenance costs, however, are usually higher than comparable hydraulically or pneumatically operated systems. Also, the electrical release systems requires a stable source of power. A back-up power source should be considered and may be required.
2. **Electric Release System Design**

— Determine element to be detected —

Determine the physical change to be detected such as fixed-temperature, rate-of-temperature increase, radiation, smoke, pressure, and the level at which the detection should take place. Determine whether two or more elements shall be detected, such as fixed temperature and smoke. Determine the need for explosion-proof components.

— Determine requirements for supervision —

Circuits that are not normally energized can be supervised by passing a small amount of current through them. This current will operate a sensing relay, but is not great enough to allow the controlled device to operate. If a break occurs in the supervised circuit, this supervisory current will be interrupted and a trouble alarm will sound. Detector circuits, release circuits, and alarm circuits are commonly supervised. If bell circuits with more than one bell are to be supervised, polarized bells must be used. Determine the requirements for such supervision.

— Select appropriate detectors —

From the manufacturer’s information, determine which detectors satisfy the physical change requirements. Note the electrical characteristics of the devices chosen, the supervision capabilities, and the suitability for the application. Verify that the detector is listed and approved for the application used, and is compatible with all other components. Space in accordance with manufacturer’s recommendations.

— Select the appropriate releasing device —

Normally, solenoid valves are used. Note the electrical characteristics of the device chosen. The releasing device must be compatible with the system control panel and other electrical components.

— Determine accessory or auxiliary device requirements —

Often electrical detection systems will be required to sound auxiliary alarms and provide contacts for independent alarm systems. The requirements for these auxiliary services and their need for supervision should be determined and their electrical characteristics considered.

— Consider the power supply and requirements for standby power —

The dependability of the power supply is a critical factor; with interruption of power, the control system will either trip immediately or be unable to trip, depending on its mode or configuration. A mechanical detection system can be designed to provide protection in this event. However, if available power is suspect, standby power in the form of a battery charger and suitable batteries are usually required and must be provided.

— Determine the current requirements of the system —

Determine the current requirements of the sum of components in the system, when it is in the set and tripped condition. Do not exceed rated capacity of the control panel used. Do not exceed the rated capacity of any system circuit.

VIKING® TECHNICAL DATA DELUGE SYSTEM DESIGN

The Viking Corporation, 210 N Industrial Park Drive, Hastings MI 49058
Telephone: 269-945-9501 Technical Services: 877-384-5464 Fax: 269-818-1680 Email: techsvcs@vikingcorp.com

— If a standby power supply is used, determine its capacity —

Standby power must be provided as long as regular power is out of service. Therefore, this time is dependent upon a large number of factors, including location of the installation, the level of maintenance, the availability of maintenance, and the historical frequency and duration of power outages. A 24-hour standby capability is usually considered the minimum requirement with 100 hours usually the maximum. Multiplying the maximum system current requirements by the time requirements will give the battery capacity and battery charger requirements.

— Select compatible components —

From the manufacturer's technical information, determine that the devices selected are compatible with each other. Observe all manufacturer's technical instructions.

— Wire sizes and maximum resistance —

Requirements are found on individual Technical Data sheets.

— Location of release and pressure switch —

The location of the solenoid valve is shown on the various System Data sheets. Flow through the release must be in the direction indicated. The pressure switch in the release control unit system is located in the alarm line.

d. Manually-Operated Release Systems

Manually operated release systems are usually integrated into one of the other types of release systems. Normally a system will incorporate a manual release at the valve, exits, operator station, or other convenient locations to operate the system during a fire emergency.

3. FLOW CONTROL VALVE SUBSTITUTION FOR DELUGE VALVE

The Viking Flow Control Valve may be used for some deluge applications. This valve offers the same operating features as a deluge valve. In addition, it offers ON-OFF remote control. See the Flow Control Valve section of the *Viking Engineering and Design Data* book for device and trimming requirements.

VIKING®

TECHNICAL DATA

DELUGE SYSTEM CONTROLLED BY ELECTRIC RELEASE

The Viking Corporation, 210 N Industrial Park Drive, Hastings MI 49058
Telephone: 269-945-9501 Technical Services 877-384-5464 Fax: 269-945-4495 Email: techsvcs@vikingcorp.com

1. DESCRIPTION

(Refer to Figures 1-4)

Viking Deluge Systems utilize a Viking Deluge Valve to control the water supply to system piping equipped with open sprinklers and/or spray nozzles. The system piping remains empty until the deluge valve is activated by operation of the release system. Deluge systems are commonly used where it is desirable to simultaneously spray water from all open sprinklers and/or nozzles on the system when it operates. Electrically controlled deluge systems require an electric solenoid valve controlled by an approved system control Panel with compatible detection system.

In fire conditions, when the detection system operates, the system control panel energizes solenoid valve open, causing the deluge valve to open and allowing water to enter the system piping. Water will flow from any open sprinklers and/or spray nozzles on the system.

2. LISTINGS AND APPROVALS

FM Approved - The Viking electrically controlled Deluge System is FM Approved when installed with specific components. Refer to current FM Approval Guide. Consult the manufacturer for any component approvals too recent to appear in the FM Approval Guide.

3. SYSTEM OPERATION

(Refer to Figures 1-4)

A. IN THE SET CONDITION

System water supply pressure enters the priming chamber of the deluge valve through the 1/4” (6,4 mm) priming line, which includes a normally open priming valve (B.1), strainer (B.2), restricted orifice (B.3) and Check Valve (B.4) and the normally closed PORV (B.10). In the SET condition, water supply pressure is trapped in the Priming Chamber by Check Valve (B.4) and normally closed Solenoid Valve (E.1). The pressure in the Priming Chamber holds the Deluge Valve clapper closed, keeping the outlet chamber and system piping dry.

B. IN FIRE CONDITIONS

When the detection system (E.4) operates, the System Control Panel (E.3) activates an alarm and energizes the normally closed Solenoid Valve (E.1) open. Pressure is released from the priming chamber faster than it is supplied through restricted orifice (B.3) (B.3). The Deluge Valve clapper opens to allow water to flow into the system piping and alarm devices, causing the water motor alarm (C.2) and water flow alarms connected to the alarm pressure switch (C.1) to activate. Water will flow from any open sprinklers and/or spray nozzles on the system.

C. FOR DELUGE VALVE TRIM

(Refer to Figures 1-4)

When the Deluge Valve operates, the air side of the PORV (B.10) loses pressure, causing the PORV (B.10) to operate. When the PORV (B.10) operates, it continually vents the priming chamber to prevent the Deluge Valve (A.1) from resetting even if the open releasing devices close. The Deluge Valve (A.1) can only be reset after the system is taken out of service, and the outlet chamber of the deluge valve and associated trim piping are de-pressurized and drained.

D. TROUBLE CONDITIONS

If the detection system operates due to mechanical damage or malfunction, the Deluge Valve will open. Water will flow from any open sprinklers and/or spray nozzles on the system. Water motor alarm (C.2) and alarms connected to alarm pressure switch (C.1) will activate.

E. MANUAL OPERATION

Anytime the handle inside emergency release (B.11) is pulled, pressure is released from the priming chamber and the deluge valve (A.1) will open. Water will flow into the system piping and alarm devices. Water will flow from any open sprinklers and/or spray nozzles on the system.

4. INSTALLATION

Refer to current Viking Technical Data describing individual components of the Viking Deluge System. Technical Data describing the Viking Deluge Valve and other system components are packed with product and in the *Viking Engineering and Design Data* book.

Also, refer to applicable installation standards, codes, and Authorities Having Jurisdiction.

1. The deluge valve (A.1) and trim must be installed only in areas where they will not be subjected to freezing temperatures.
2. Alarm pressure switch (C.1) should activate when pressurized to 4 to 8 PSI (.3 to .6 bar) on pressure rise. Alarm pressure switch (C.1) should be wired to activate the waterflow alarm.
3. All initiating devices (detectors) (E.4), indicating appliances, releasing devices(E.1), and the system control panel (E.3) must be compatible and approved for use with the deluge system that is used. Refer to appropriate Fire Protection Equipment Approval Guides and current Viking Technical Data describing individual components of the Viking Deluge System that is used.

VIKING®

TECHNICAL DATA

DELUGE SYSTEM CONTROLLED BY ELECTRIC RELEASE

The Viking Corporation, 210 N Industrial Park Drive, Hastings MI 49058
Telephone: 269-945-9501 Technical Services 877-384-5464 Fax: 269-945-4495 Email: techsvcs@vikingcorp.com

5. PLACING THE SYSTEM IN SERVICE

(Refer to Figures 1-4)

NOTE: FOR NEW INSTALLATIONS, REFER TO INSTRUCTIONS PROVIDED IN TECHNICAL DATA DESCRIBING THE VIKING DELUGE VALVE AND OTHER SYSTEM COMPONENTS. (SEE SECTION 8.)

To Return a System to Service:

1. Verify that the system has been properly drained. Auxiliary drain (B.6) should be open. Verify that the emergency release (B.11) is closed.
2. Open the priming valve (B.1).
3. Reset the system control panel. For Viking Model VFR400 Panel, open the panel and press “RESET”. Solenoid valve (E.1) should close. Flow from the solenoid valve (E.1) to the drain cup should stop.
4. Open the flow test valve (B.15).
5. Partially open the main water supply control valve (D.1).
6. When full flow develops from the flow test valve (B.15), close the flow test valve (B.15). Verify that there is no flow from the open auxiliary drain (B.6).
7. Close the auxiliary drain (B.6).
8. Fully open and secure the main water supply control valve (D.1).
9. Verify that the alarm shut-off valve (B.9) is open and that all other valves are in their normal operating position.
10. Depress the plunger of the drip check valve (B.7). No water should flow from the drip check valve (B.7) when the plunger is pushed

6. EMERGENCY INSTRUCTIONS

(Refer to Figures 1-4)

To Take System Out of Service:

WARNING: PLACING A CONTROL VALVE OR DETECTION SYSTEM OUT OF SERVICE MAY ELIMINATE THE FIRE PROTECTION CAPABILITIES OF THE SYSTEM. PRIOR TO PROCEEDING, NOTIFY ALL AUTHORITIES HAVING JURISDICTION. CONSIDERATION SHOULD BE GIVEN TO EMPLOYMENT OF A FIRE PATROL IN THE AFFECTED AREAS.

After a fire, verify that the fire is OUT and that placing the system out of service has been authorized by the appropriate Authority Having Jurisdiction.

1. Close the water supply control valve (D.1).
2. Open the auxiliary drain (B.6).
3. Silence alarms (optional).
   a. To silence electric alarms controlled by Viking Model VFR400 Release Control Panel, open panel, and press “ALARM SILENCE”.
   b. To silence electric alarms controlled by the pressure switch (C.1) and to silence the water motor alarm (C.2), close the alarm shut-off valve (B.9).

NOTE: ELECTRIC ALARMS CONTROLLED BY A PRESSURE SWITCH INSTALLED IN THE ½” (15 MM) NPT CONNECTION FOR A NON-INTERRUPTIBLE ALARM PRESSURE SWITCH CANNOT BE SHUT OFF UNTIL THE DELUGE VALVE IS RESET OR TAKEN OUT OF SERVICE.

NOTE: SPRINKLER SYSTEMS THAT HAVE BEEN SUBJECTED TO A FIRE MUST BE RETURNED TO SERVICE AS SOON AS POSSIBLE. THE ENTIRE SYSTEM MUST BE INSPECTED FOR DAMAGE, AND REPAIRED OR REPLACED AS NECESSARY.

4. Close the priming valve (B.1) (optional). Sprinkler systems that have been subjected to a fire must be returned to service as soon as possible. The entire system must be inspected for damage, and repaired or replaced as necessary.
5. Replace any detectors (E.4) that have been damaged.
6. Replace any sprinklers and/or spray nozzles that have been damaged or have been exposed to fire conditions.
7. Perform all maintenance procedures recommended in Technical Data describing individual components of the system that has operated.
8. Return the system to service as soon as possible. Refer to section 5. PLACING THE SYSTEM IN SERVICE.

VIKING®

TECHNICAL DATA

DELUGE SYSTEM CONTROLLED BY ELECTRIC RELEASE

The Viking Corporation, 210 N Industrial Park Drive, Hastings MI 49058
Telephone: 269-945-9501 Technical Services 877-384-5464 Fax: 269-945-4495 Email: techsvcs@vikingcorp.com

7. INSPECTIONS AND TESTS

NOTICE: THE OWNER IS RESPONSIBLE FOR MAINTAINING THE FIRE PROTECTION SYSTEM AND DEVICES IN PROPER OPERATING CONDITION.

It is imperative that the system be inspected and tested on a regular basis in accordance with NFPA 25. Refer to INSPECTIONS and TESTS recommended in current Viking Technical Data describing individual components of the Viking Deluge System used. (See section 8 for hyperlinks to Viking Technical Data.)
The frequency of the inspections may vary due to contaminated water supplies, corrosive water supplies, corrosive atmospheres, as well as the condition of the air supply to the system. For minimum maintenance and inspection requirements, refer to NFPA 25. In addition, the Authority Having Jurisdiction may have additional maintenance, testing, and inspection requirements that must be followed.
WARNING: Any system maintenance that involves placing a control valve or detection system out of service may eliminate the fire protection capabilities of that system. Prior to proceeding, notify all Authorities Having Jurisdiction. Consideration should be given to employment of a fire patrol in the affected areas.

8. ORDERING INSTRUCTIONS

To order a complete Electric release Deluge system, the following components must be purchased: Deluge Valve, Conventional Trim, and a Release Trim package.

Valve Part Numbers

DESCRIPTION	NOMINAL SIZE	PART NUMBER
DELUGE VALVE		
Angle Style		
Threaded NPT Painted Red		
Model & Pipe O.D.		
Model E-3 48mm	1½" / DN40	09889
Model E-1 60mm	2" / DN50	05852C
HALAR®		
Model E-4 48mm	1½" / DN40	09890Q/B
Model E-2 60mm	2" / DN50	08361Q/B
Flange/Flange Painted Red		
Flange Drilling	**Model E-1**	
ANSI	3"	05912C
ANSI	4"	05909C
ANSI	6"	05906C
ANSI/Japan	6"	07136
PN10/16	DN80	08626
PN10/16	DN100	08629
PN10/16	DN150	08631
HALAR®		
Flange Drilling	**Model E-2**	
ANSI	3"	08362Q/B
ANSI	4"	08363Q/B
ANSI	6"	08364Q/B
PN10/16	DN80	08862Q/B
PN10/16	DN100	08863Q/B
PN10/16	DN150	08864Q/B
Flange/Groove Painted Red		
Flange Drilling / Pipe O.D.	**Model E-1**	
ANSI / 89mm	3"	05835C
ANSI / 114mm	4"	05839C
ANSI / 168mm	6"	05456C
PN10/16 / 89mm	DN80	09539
PN10/16 / 114mm	DN100	09540
PN10/16 / 168mm	DN150	05456C
HALAR®		
Flange Drilling / Pipe O.D.	**Model E-2**	
ANSI / 89mm	3"	11064Q/B
ANSI / 114mm	4"	11065Q/B
ANSI / 168mm	6"	11001Q/B
PN10/16 / 168mm	DN150	11001Q/B

DESCRIPTION	NOMINAL SIZE	PART NUMBER
Straight Through		
Threaded Painted Red		
Pipe O.D.	**Model F-1**	
NPT 48mm	1½"	12126
NPT 60mm	2"	12059
NPT 65mm	2½"	12401
BSP 48mm	DN40	12682
BSP 60mm	DN50	12686
HALAR®	**Model F-2**	
NPT 65mm	2½"	12402Q/B
Flange/Flange Painted Red		
Flange Drilling	**Model F-1**	
ANSI	3"	12014
ANSI	4"	11953
ANSI	6"	11955
ANSI	8"	11991
ANSI/Japan	6"	11964
PN10/16	DN80	12026
PN10/16	DN100	11965
PN10/16	DN150	11956
PN10	DN200	11995
PN16	DN200	11999
HALAR®		
Flange Drilling	**Model F-2**	
ANSI	3"	12015Q/B
ANSI	4"	11960Q/B
ANSI	6"	11962Q/B
ANSI	8"	11992Q/B
PN10/16	DN80	12027Q/B
PN10/16	DN100	11966Q/B
PN10/16	DN150	11963Q/B
PN10	DN200	11996Q/B
PN16	DN200	12000Q/B

Note: When viewing this datapage online, Part Numbers displayed in BLUE are hyperlinks. Clicking the part number will open the corresponding Technical Data Page.

DESCRIPTION	NOMINAL SIZE	PART NUMBER
Flange/Groove Painted Red		
Flange Drilling / Pipe O.D.	Model F-1	
ANSI / 89mm	3"	12018
ANSI / 114mm	4"	11952
ANSI / 168mm	6"	11954
PN10/16 / 89mm	DN80	12030
PN10/16 / 114mm	DN100	11958
PN10/16 / 165mm	DN150	12640
PN10/16 / 168mm	DN150	11954
HALAR®		
Flange Drilling / Pipe O.D.	**Model F-2**	
ANSI / 89mm	3"	12019Q/B
ANSI / 114mm	4"	11959Q/B
ANSI / 168mm	6"	11961Q/B
PN10/16 / 89mm	DN80	12644Q/B
PN10/16 / 114mm	DN100	12645Q/B
PN10/16 / 165mm	DN150	12641Q/B
PN10/16 / 168mm	DN150	11961Q/B
Groove/Groove Painted Red		
Pipe O.D.	**Model F-1**	
48mm	1½" / DN40	12125
60mm	2" / DN50	12057
73mm	2½" / DN65	12403
76mm	DN80	12729
89mm	3" / DN80	12022
114mm	4" / DN100	11513
165mm	DN150	11910
168mm	6" / DN150	11524
219mm	8" / DN200	11018
HALAR®		
Pipe O.D.	**Model F-2**	
48mm	1½" / DN40	12127Q/B
60mm	2" / DN50	12058Q/B
73mm	2½" / DN65	12404Q/B
76mm	DN80	12730Q/B
89mm	3" / DN80	12023Q/B
114mm	4" / DN100	11514Q/B
165mm	DN150	11911Q/B
168mm	6" / DN150	11525Q/B
219mm	8" / DN200	11118Q/B

VIKING®

TECHNICAL DATA

DELUGE SYSTEM CONTROLLED BY ELECTRIC RELEASE

The Viking Corporation, 210 N Industrial Park Drive, Hastings MI 49058
Telephone: 269-945-9501 Technical Services 877-384-5464 Fax: 269-945-4495 Email: techsvcs@vikingcorp.com

Valve Trim Package Part Numbers

DESCRIPTION	NOMINAL SIZE	PART NUMBER
CONVENTIONAL DELUGE VALVE TRIM Includes Deluge Valve Accessory Package	Rated to 250 psi (1 724 kPa)	
	Use with Angle Style Valves	
	Galvanized	
	1½" / DN40	14629-1
	2" / DN50	14630-1
	3" / DN80	14631-1
	4" / DN100	14632-1
	6" / DN150	14633-1
	Brass	
	1½" / DN40	14629-2
	2" / DN50	14630-2
	3" / DN80	14631-2
	4" / DN100	14632-2
	6" / DN150	14633-2
	Use with Straight Through Valves	
	Galvanized	
Hoz.	1½" / DN40	14635-1
	2" / DN50	14635-1
	2½" / DN65	14637-1
	3" / DN80	14637-1
	4" / DN100	14638-1
	6" / DN150	14640-1
	8" / DN200	14643-1
Vert.	1½" / DN40	14634-1
	2" / DN50	14634-1
	2½" / DN65	14636-1
	3" / DN80	14636-1
	4" / DN100	14639-1
	6" / DN150	14641-1
	8" / DN200	14642-1
	Brass	
Hoz.	1½" / DN40	14635-2
	2" / DN50	14635-2
	2½" / DN65	14637-2
	3" / DN80	14637-2
	4" / DN100	14638-2
	6" / DN150	14640-2
	8" / DN200	14643-2
Vert.	1½" / DN40	14634-2
	2" / DN50	14634-2
	2½" / DN65	14636-2
	3" / DN80	14636-2
	4" / DN100	14639-2
	6" / DN150	14641-2
	8" / DN200	14642-2

Release Trim Package Part Numbers

ELECTRIC RELEASE TRIM PACKAGES	
Finish	**Part Number**
Use with Straight Through and Angle Style Valves	
Galvanized	10830
Brass	10832
NOTE: Solenoid valve must be ordered separately.	

VIKING®

TECHNICAL DATA

DELUGE SYSTEM CONTROLLED BY ELECTRIC RELEASE

The Viking Corporation, 210 N Industrial Park Drive, Hastings MI 49058
Telephone: 269-945-9501 Technical Services 877-384-5464 Fax: 269-945-4495 Email: techsvcs@vikingcorp.com

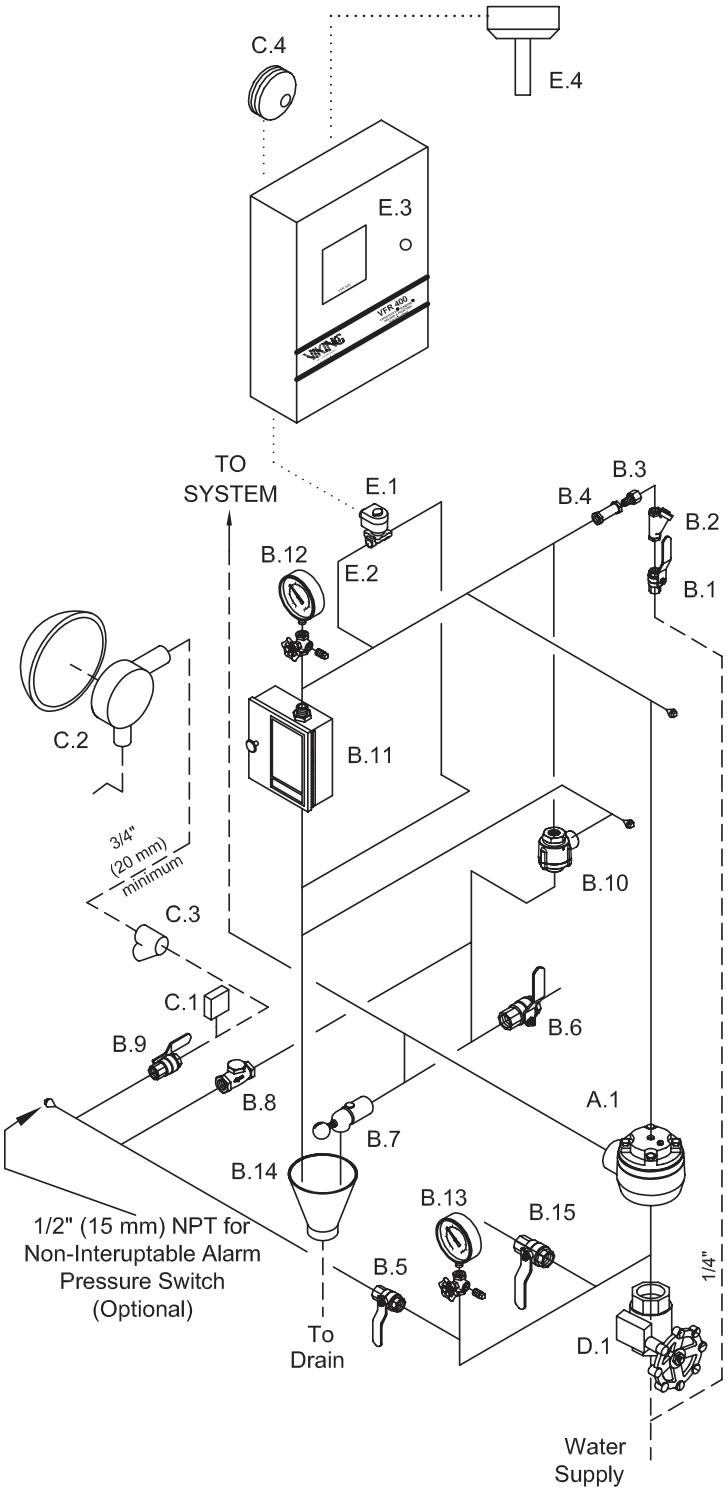

SYSTEM COMPONENTS

A. Valve
- A.1 Deluge Valve

B. Deluge Valve Conventional Trim *
(See Deluge Valve Conventional Trim Charts)
- B.1 Priming Valve
- B.2 Strainer
- B.3 1/16" Restricted Orifice
- B.4 Spring Loaded Check Valve
- B.5 Alarm Test Valve (Normally Closed)
- B.6 Auxiliary Drain Valve (Normally Closed)
- B.7 Drip Check Valve
- B.8 Drain Check Valve
- B.9 Alarm Shut-Off Valve (Normally Open)
- B.10 Pressure Operated Relief Valve (P.O.R.V.)
- B.11 Emergency Release
- B.12 Priming Pressure Water Gauge and Valve
- B.13 Water Supply Pressure Gauge and Valve
- B.14 Drain Cup
- B.15 Flow Test Valve (Normally Closed)

C. Water Flow Alarm Equipment
- C.1 Alarm Pressure Switch and/or
- C.2 Water Motor Alarm (Strainer Required)
- C.3 Strainer
- C.4 Electric Alarm Bell

D. Riser
- D.1 Water Supply Control Valve

E. Release System
- E.1 Solenoid Valve
- E.2 Electric Release Module Trim
- E.3 System Control Panel configured for Single Zone Deluge operation.
- E.4 Electric Detection System. Heat Detector shown for clarity.

— — — Dashed lines indicate pipe required but not listed in "System Components" Table.

* Viking Deluge Valve Trim Packages contain items B.1 through B.15 and associated nipples. Viking Accessory Package for Conventional Deluge Valve Trim contains B.2 through B.5, B.7 through B.11, and B.14.

. . . . . Dotted lines indicate electrical detection system wiring required but not listed in "System Components" Table. For additional wiring requirements refer to technical data for components used.

FIGURE 1: ANGLE DELUGE VALVE WITH CONVENTIONAL TRIM
1-1/2" VALVE SHOWN

VIKING®

TECHNICAL DATA

DELUGE SYSTEM CONTROLLED BY ELECTRIC RELEASE

The Viking Corporation, 210 N Industrial Park Drive, Hastings MI 49058
Telephone: 269-945-9501 Technical Services 877-384-5464 Fax: 269-945-4495 Email: techsvcs@vikingcorp.com

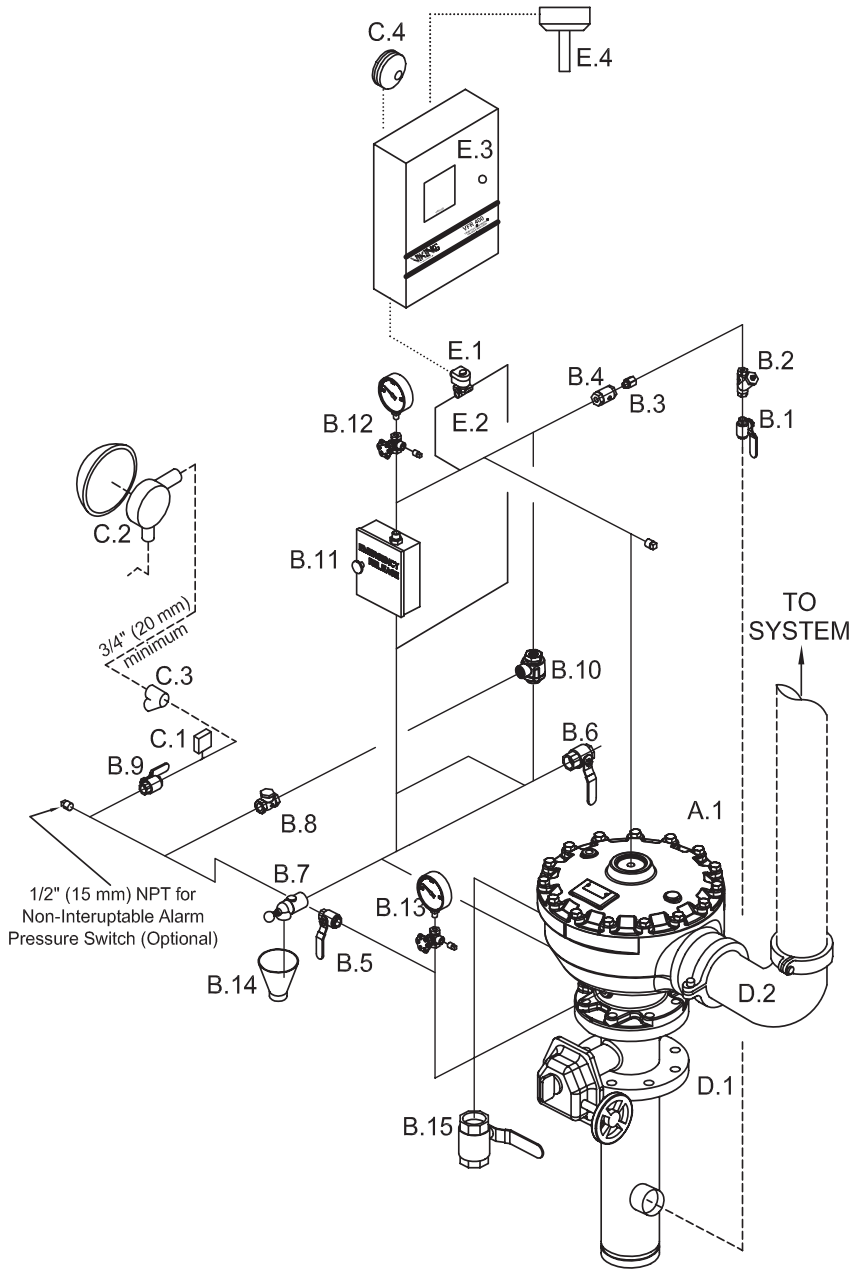

SYSTEM COMPONENTS

A. Valve
- A.1 Deluge Valve

B. Deluge Valve Conventional Trim *
- (See Deluge Valve Conventional Trim Charts)
- B.1 Priming Valve
- B.2 Strainer
- B.3 1/16" Restricted Orifice
- B.4 Spring Loaded Check Valve
- B.5 Alarm Test Valve (Normally Closed)
- B.6 Auxiliary Drain Valve (Normally Closed)
- B.7 Drip Check Valve
- B.8 Drain Check Valve
- B.9 Alarm Shut-Off Valve (Normally Open)
- B.10 Pressure Operated Relief Valve (P.O.R.V.)
- B.11 Emergency Release
- B.12 Priming Pressure Water Gauge and Valve
- B.13 Water Supply Pressure Gauge and Valve
- B.14 Drain Cup
- B.15 Flow Test Valve (Normally Closed)

C. Water Flow Alarm Equipment
- C.1 Alarm Pressure Switch and/or
- C.2 Water Motor Alarm (Strainer Required)
- C.3 Strainer

D. Riser
- D.1 Water Supply Control Valve
- D.2 90° Ell. (Grooved Ell Shown. Deluge Valve also available with Flanged Outlet.)

E. Release System
- E.1 Solenoid Valve
- E.2 Electric Release Module Trim
- E.3 System Control Panel configured for Single Zone Deluge operation.
- E.4 Electric Detection System. Heat Detector shown for clarity.

--- Dashed lines indicate pipe required but not listed in "System Components" Table.

* Viking Deluge Valve Trim Packages contain items B.1 through B.15 and associated nipples. Viking Accessory Package for Conventional Deluge Valve Trim contains B.2 through B.5, B.7 through B.11, and B.14.

····· Dotted lines indicate electrical detection system wiring required but not listed in "System Components" Table. For additional wiring requirements refer to technical data for components used.

FIGURE 2: ANGLE DELUGE VALVE WITH CONVENTIONAL TRIM
6” VALVE SHOWN. ALSO AVAILABLE IN 2”, 3”, & 4”.

VIKING®

TECHNICAL DATA

DELUGE SYSTEM CONTROLLED BY ELECTRIC RELEASE

The Viking Corporation, 210 N Industrial Park Drive, Hastings MI 49058
Telephone: 269-945-9501 Technical Services 877-384-5464 Fax: 269-945-4495 Email: techsvcs@vikingcorp.com

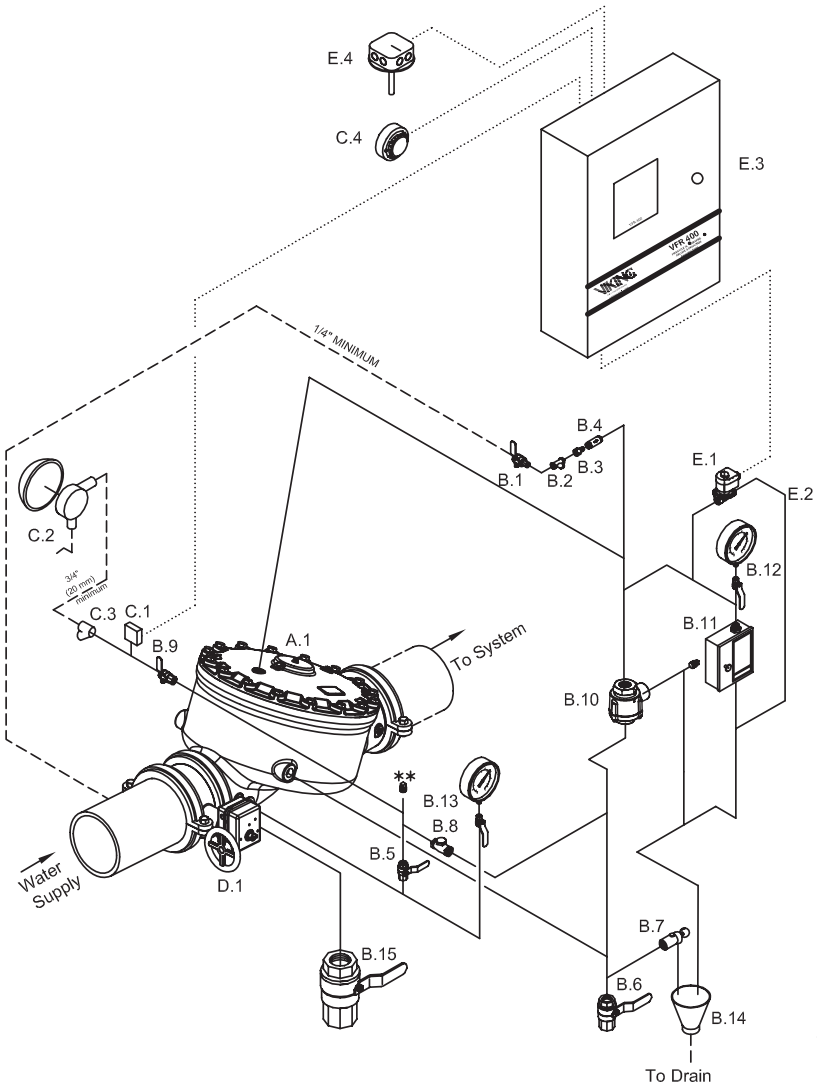

SYSTEM COMPONENTS

A. Valve
- A.1 Deluge Valve

B. Deluge Valve Conventional Trim *
(See Deluge Valve Conventional Trim Charts)
- B.1 Priming Valve
- B.2 Strainer
- B.3 1/16" Restricted Orifice
- B.4 Spring Loaded Check Valve
- B.5 Alarm Test Valve (Normally Closed)
- B.6 Auxiliary Drain Valve (Normally Closed)
- B.7 Drip Check Valve
- B.8 Drain Check Valve
- B.9 Alarm Shut-Off Valve (Normally Open)
- B.10 Pressure Operated Relief Valve (P.O.R.V.)
- B.11 Emergency Release
- B.12 Priming Pressure Water Gauge and Valve
- B.13 Water Supply Pressure Gauge and Valve
- B.14 Drain Cup
- B.15 Flow Test Valve (Normally Closed)

C. Water Flow Alarm Equipment
- C.1 Alarm Pressure Switch and/or
- C.2 Water Motor Alarm (Strainer Required)
- C.3 Strainer
- C.4 Electric Alarm Bell

D. Riser
- D.1 Water Supply Control Valve

E. Release System
- E.1 Solenoid Valve
- E.2 Electric Release Module Trim
- E.3 System Control Panel configured for Single Zone Deluge operation.
- E.4 Electric Detection System. Heat Detector shown for clarity.

– – – – Dashed lines indicate pipe required but not listed in "System Components" Table.

* Viking Deluge Valve Trim Packages contain items B.1 through B.15 and associated nipples. Viking Accessory Package for Conventional Deluge Valve Trim contains B.2 through B.5, B.7 through B.11, and B.14.

..... Dotted lines indicate electrical detection system wiring required but not listed in "System Components" Table. For additional wiring requirements refer to technical data for components used.

FIGURE 3: STRAIGHT THROUGH DELUGE VALVE WITH HORIZONTAL CONVENTIONAL TRIM
6” VALVE SHOWN. ALSO AVAILABLE IN 1-1/2”, 2”, 2-1/2”, 3”, 4” & 8”.

TECHNICAL DATA

DELUGE SYSTEM CONTROLLED BY ELECTRIC RELEASE

The Viking Corporation, 210 N Industrial Park Drive, Hastings MI 49058
Telephone: 269-945-9501 Technical Services 877-384-5464 Fax: 269-945-4495 Email: techsvcs@vikingcorp.com

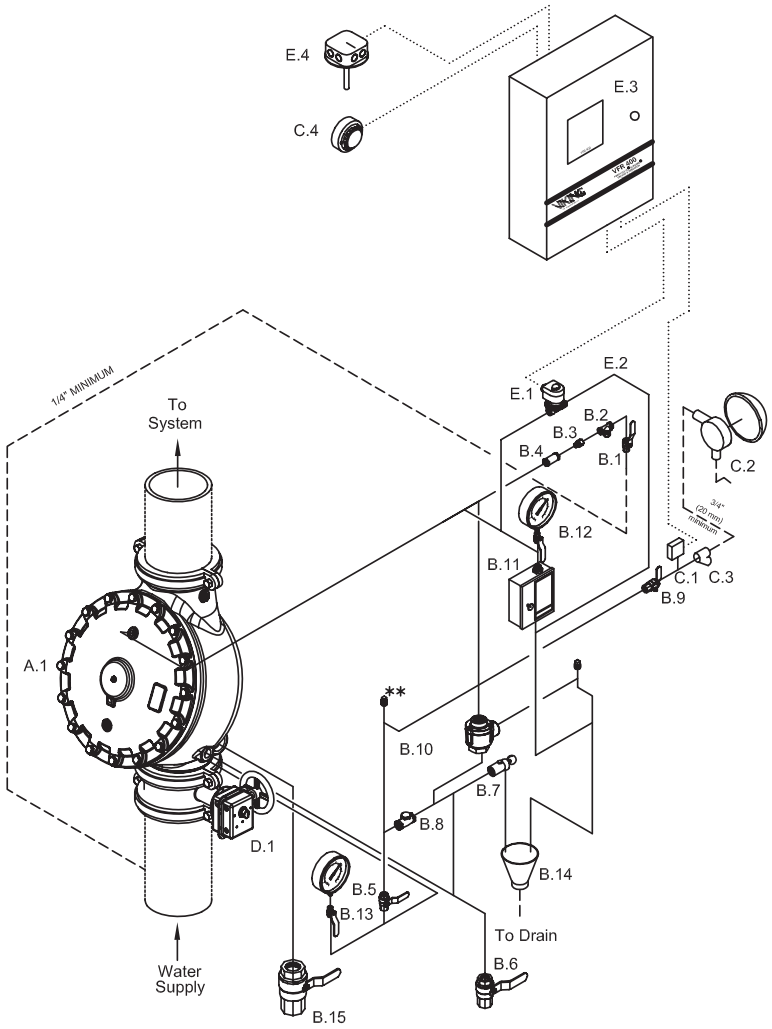

SYSTEM COMPONENTS

A. Valve
- A.1 Deluge Valve

B. Deluge Valve Conventional Trim *
(See Deluge Valve Conventional Trim Charts)
- B.1 Priming Valve
- B.2 Strainer
- B.3 1/16" Restricted Orifice
- B.4 Spring Loaded Check Valve
- B.5 Alarm Test Valve (Normally Closed)
- B.6 Auxiliary Drain Valve (Normally Closed)
- B.7 Drip Check Valve
- B.8 Drain Check Valve
- B.9 Alarm Shut-Off Valve (Normally Open)
- B.10 Pressure Operated Relief Valve (P.O.R.V.)
- B.11 Emergency Release
- B.12 Priming Pressure Water Gauge and Valve
- B.13 Water Supply Pressure Gauge and Valve
- B.14 Drain Cup
- B.15 Flow Test Valve (Normally Closed)

C. Water Flow Alarm Equipment
- C.1 Alarm Pressure Switch and/or
- C.2 Water Motor Alarm (Strainer Required)
- C.3 Strainer
- C.4 Electric Alarm Bell

D. Riser
- D.1 Water Supply Control Valve

E. Release System
- E.1 Solenoid Valve
- E.2 Electric Release Module Trim
- E.3 System Control Panel configured for Single Zone Deluge operation.
- E.4 Electric Detection System. Heat Detector shown for clarity.

– – – – Dashed lines indicate pipe required but not listed in "System Components" Table.

* Viking Deluge Valve Trim Packages contain items B.1 through B.15 and associated nipples. Viking Accessory Package for Conventional Deluge Valve Trim contains B.2 through B.5, B.7 through B.11, and B.14.

..... Dotted lines indicate electrical detection system wiring required but not listed in "System Components" Table. For additional wiring requirements refer to technical data for components used.

FIGURE 8: STRAIGHT THROUGH DELUGE VALVE WITH CONVENTIONAL VERTICAL TRIM
6” VALVE SHOWN. ALSO AVAILABLE IN 1-1/2”, 2”, 2-1/2”, 3”, 4” & 8”.

VIKING®

TECHNICAL DATA

4” (DN100) MODEL F-1 STRAIGHT THROUGH DELUGE VALVE HORIZONTAL CONVENTIONAL TRIM CHART Maximum 250 PSI WWP

The Viking Corporation, 210 N Industrial Park Drive, Hastings MI 49058
Telephone: 269-945-9501 Technical Services: 877-384-5464 Fax: 269-818-1680 Email: techsvcs@vikingcorp.com

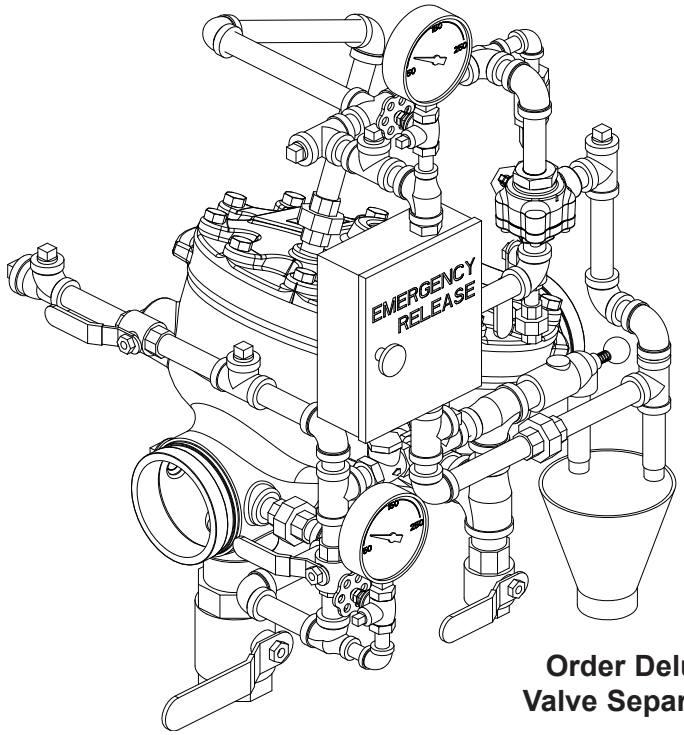

Order Deluge Valve Separately

Figure 1

This Trim Chart is for use with the following Viking Trim Sets		
Valve Size	**Galvanized Trim Part No.**	**Brass Trim Part No.**
4” (DN100)	14638-1	14638-2

This Trim is for use with the following Release Module Trim Kits		
Release Type	**Galvanized***	**Brass****
Pneumatic	10809	10811
Electric	10830	10832
Electric/ Pneumatic	12661-1	12661-2
Pneumatic/ Pneumatic	12662-1	12662-2

* Standard Trim sets for Model F Deluge Valves consist of galvanized nipples and fittings.
**Refer to Technical Data describing the Halar® Coated Deluge Valve and the *Viking Foam Systems Engineering and Design Data* book for applications where brass trim is recommended.
Note: Nipple lengths for brass trim may vary from those shown on this Trim Chart.

Notes: For use with Trim Chart on Page 240b

Note: When viewing this data page online, blue text represents hyperlinks and will open the appropriate data page when clicked.

General Notes:

- Valve must be trimmed as shown. Any deviation from trim size or arrangement may affect the proper operation of the valve.
- All pipe 3/4” (20 mm) and smaller shall be galvanized steel except when other materials are specified in the Technical Data for the Halar® Coated Deluge Valve or when other materials are specified in the *Viking Foam Systems Engineering and Design Data* book.
- When Model F Deluge Valves are used on pre-mixed Foam Systems, trim piping must be of copper pipe with brass fittings unless otherwise specified in the Technical Data for the Halar® Coated Deluge Valve or the *Viking Foam Systems Engineering and Design Data* book.
- Dimensions in parentheses are millimeter and may be approximations.

Note 1: 1/2” (15 mm) NPT plugged outlet provided for connecting certain optional components and associated trim.

Note 2: Release System connection. Viking Deluge and Flow Control Valves are compatible with hydraulic, pneumatic, and electric release systems. A Pneumatic Actuator is required on all Viking Deluge Valves and Flow Control Valves equipped with Pneumatic Release Systems.

Note 3: Alarm Connections: Connect alarm line piping to 3/4” (20 mm) NPT outlet. When using a Water Motor Alarm, a strainer is required. 1/2” (15 mm) NPT outlet is for electric Alarm Pressure Switch.

Note 4: Optional non-interruptible connection for Alarm Pressure Switch to activate electric alarm panel. Note: After the Deluge Valve trips, this location cannot be shut off. Alarms may operate until the outlet chamber of the deluge valve is de-pressurized below the set point of the Alarm Pressure Switch.

Note 5: Viking Drain Check Valve is manufactured with a 0.067“ (1.7 mm) orifice to allow alarm line to drain. DO NOT substitute. Check label for proper orientation.

Note 6: Inlet side of PORV is connected to the top chamber of the deluge valve. Inlet of PORV should be facing up. Outlet goes to open drain.

VIKING®

TECHNICAL DATA

4" (DN100) MODEL F-1 STRAIGHT THROUGH DELUGE VALVE HORIZONTAL CONVENTIONAL TRIM CHART Maximum 250 PSI WWP

The Viking Corporation, 210 N Industrial Park Drive, Hastings MI 49058
Telephone: 269-945-9501 Technical Services: 877-384-5464 Fax: 269-818-1680 Email: techsvcs@vikingcorp.com

Refer to page 240a for General Notes and Notes 1 through 6.

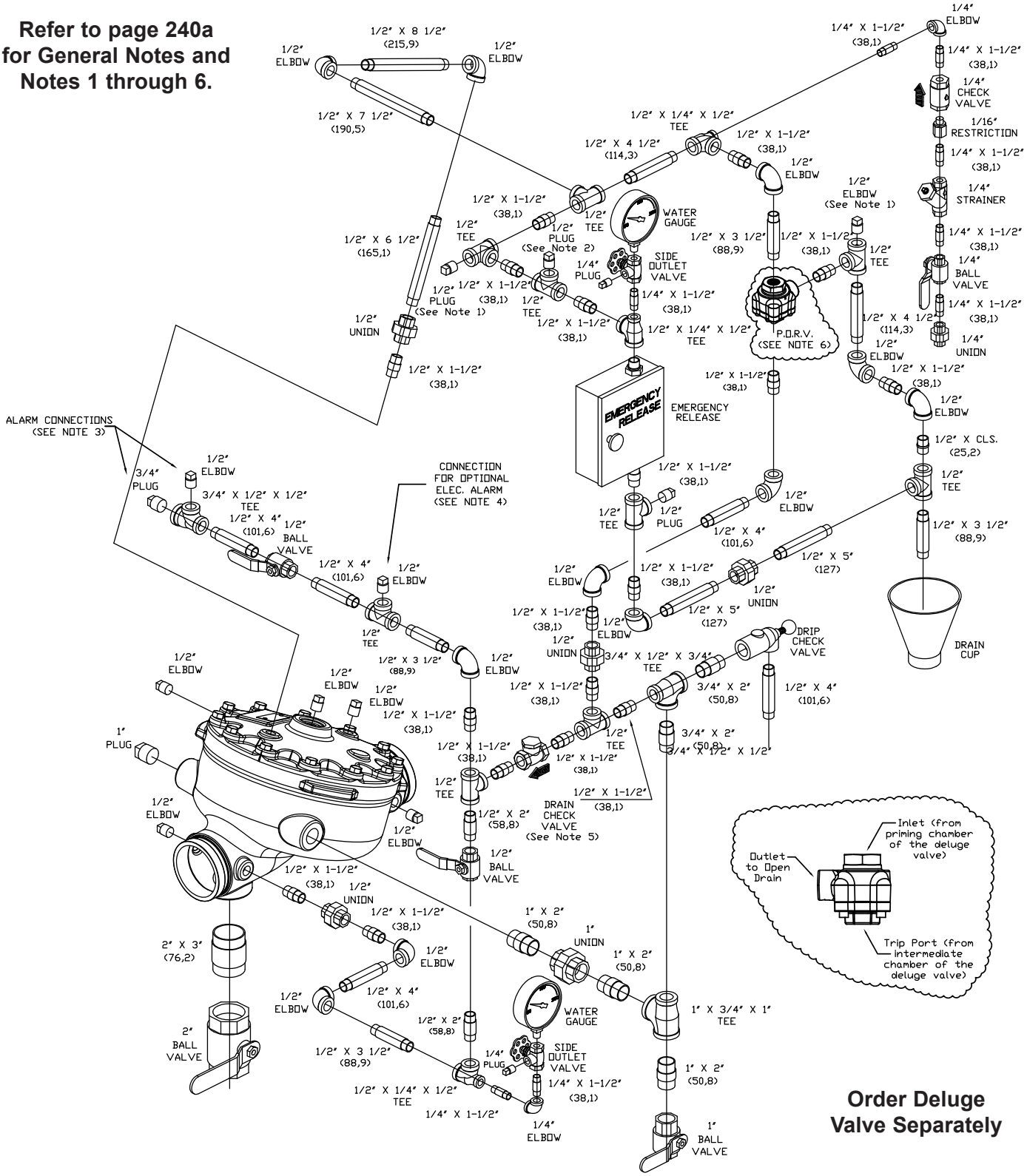

Order Deluge Valve Separately

Figure 2

VIKING®

TECHNICAL DATA

4" (DN100) MODEL F-1 STRAIGHT THROUGH DELUGE VALVE HORIZONTAL CONVENTIONAL TRIM CHART Maximum 250 PSI WWP

The Viking Corporation, 210 N Industrial Park Drive, Hastings MI 49058
Telephone: 269-945-9501 Technical Services: 877-384-5464 Fax: 269-818-1680 Email: techsvcs@vikingcorp.com

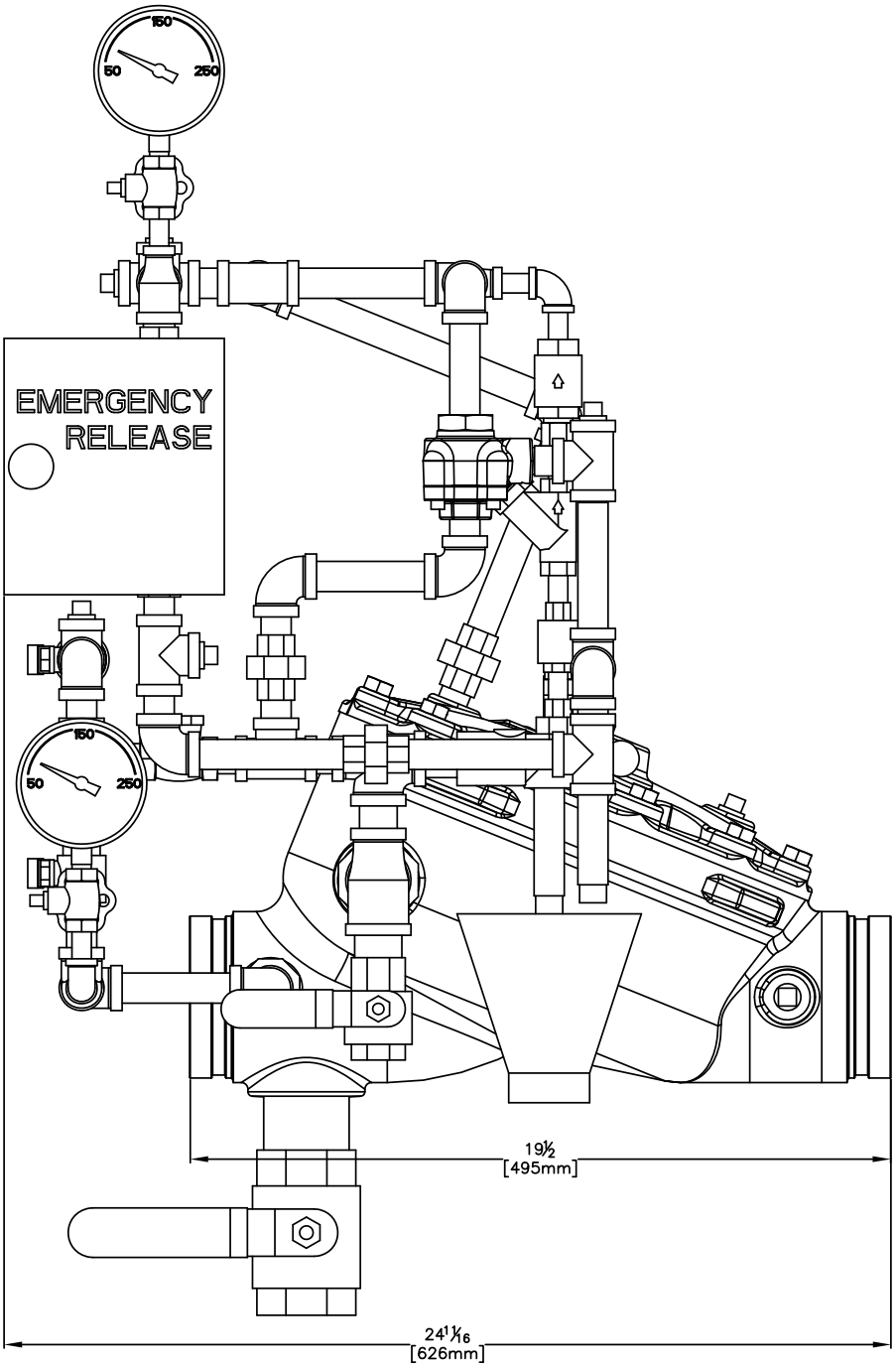

Figure 3a: Installation Dimensions

VIKING®

TECHNICAL DATA

4" (DN100) MODEL F-1 STRAIGHT THROUGH DELUGE VALVE HORIZONTAL CONVENTIONAL TRIM CHART Maximum 250 PSI WWP

The Viking Corporation, 210 N Industrial Park Drive, Hastings MI 49058
Telephone: 269-945-9501 Technical Services: 877-384-5464 Fax: 269-818-1680 Email: techsvcs@vikingcorp.com

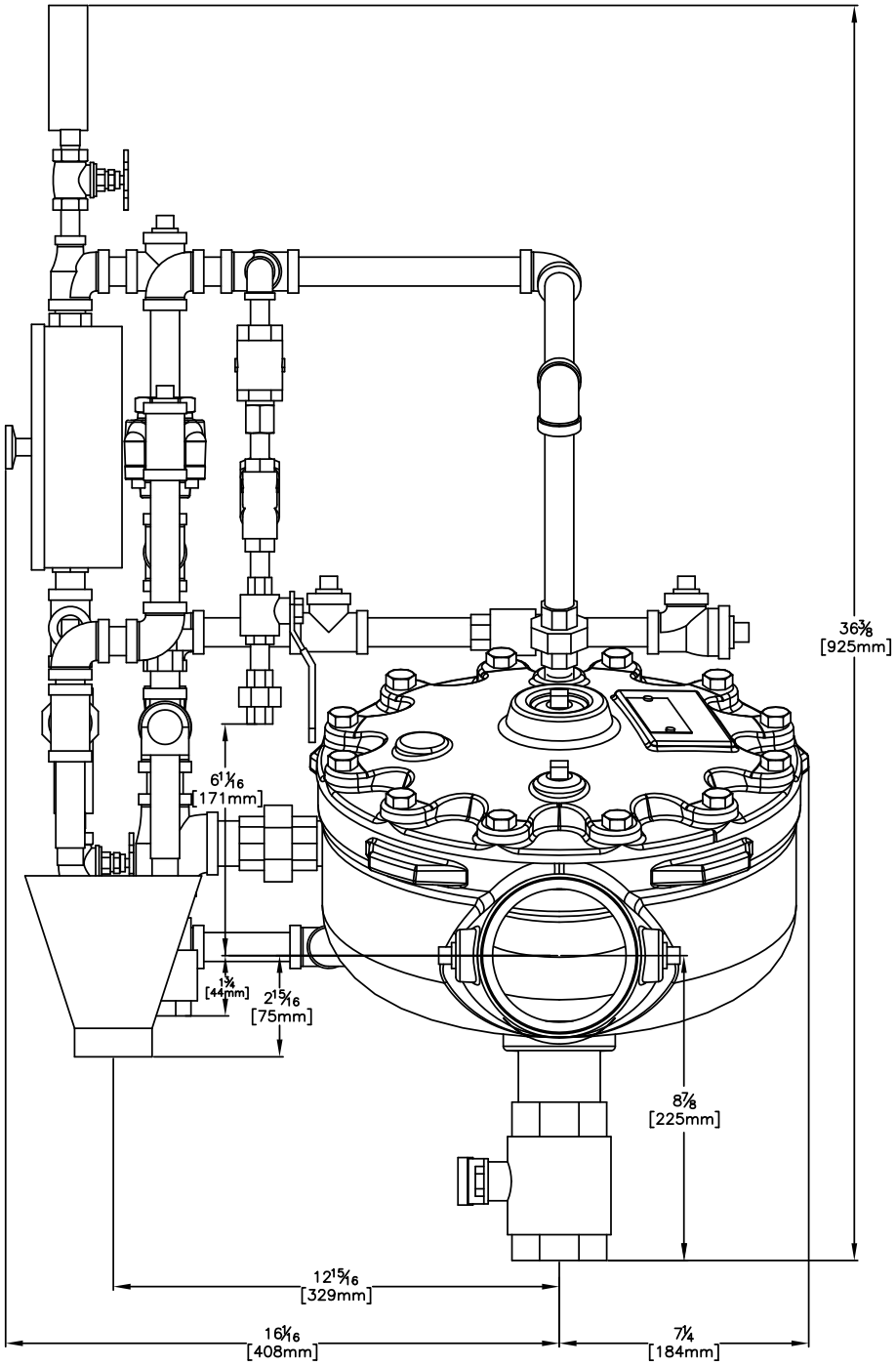

Figure 3b: Installation Dimensions

VIKING®

TECHNICAL DATA

ELECTRIC RELEASE MODULE TRIM CHART

Maximum 250 psi Water Working Pressure

The Viking Corporation, 210 N Industrial Park Drive, Hastings MI 49058
Telephone: 269-945-9501 Technical Services 877-384-5464 Fax: 269-818-1680 Email: techsvcs@vikingcorp.com

Available since 1999.

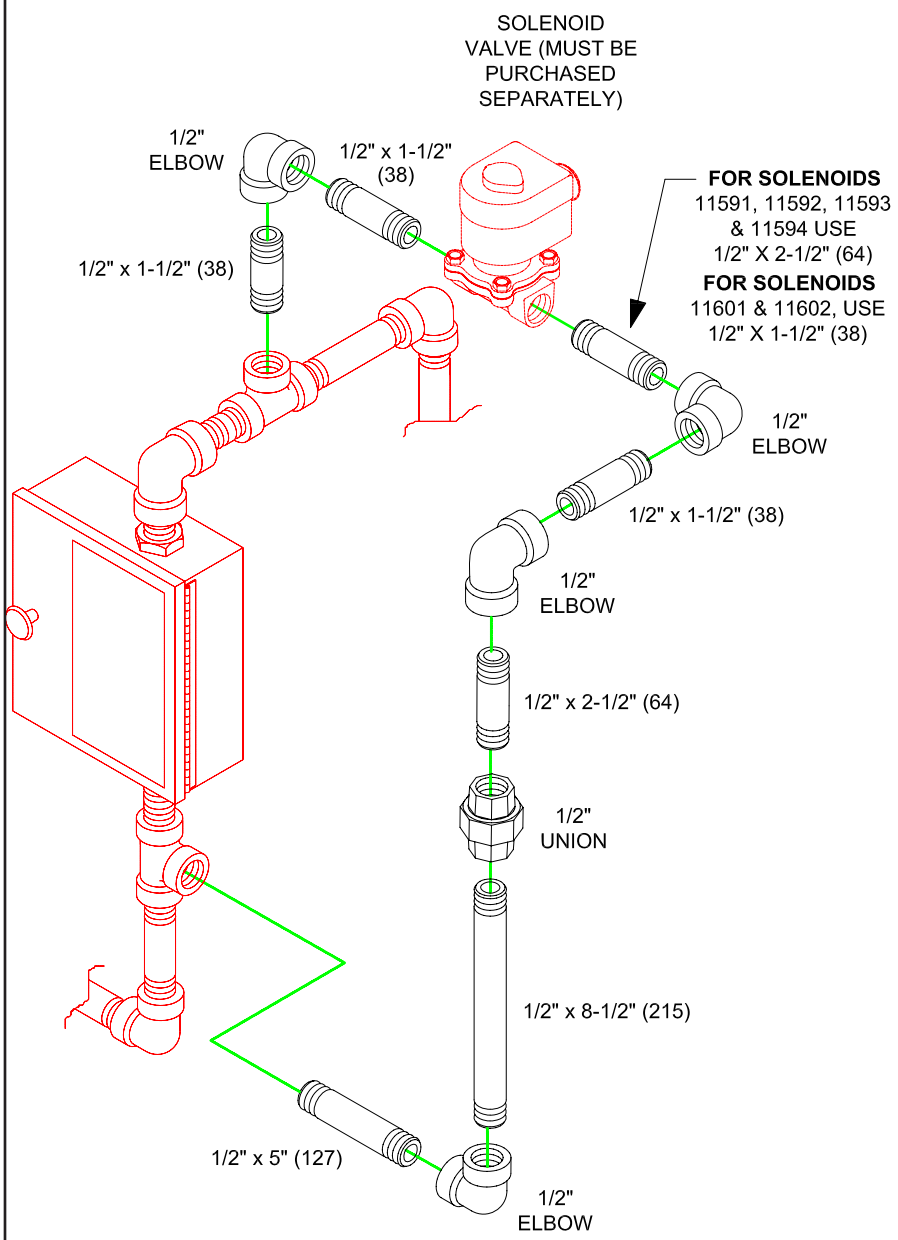

For Use on Standard Trim	For Use on Brass* Trim	For Use on Stainless Steel* Trim
10830	10832	10831

NOTE: Order solenoid valve separately. Electric Release Module is for use with Viking Solenoid Valve Part Nos. 11591, 11592, 11593, 11594, 11601, and 11602.

The Viking Electric Release Module is for use on Viking Deluge and Flow Control valves only. Verify that the valve is trimmed with Conventional Trim installed according to the current Conventional Trim Chart for the valve used. Install the Electric Release Module using the connections provided and as shown in Figure 1 on this page.

*Refer to technical data describing the Halar® Coated Deluge Valve and the *Viking Foam Systems Engineering and Design Data* book for applications where brass and stainless steel trim are recommended.

ORDER DELUGE VALVE, TRIM, SOLENOID VALVE, AND RELEASE MODULE TRIM SEPARATELY.

FIGURE 1: ELECTRIC RELEASE MODULE

THIS PAGE INTENTIONALLY
LEFT BLANK

VIKING®

TECHNICAL DATA

MODEL E SPRAY NOZZLES VK810 - VK817

The Viking Corporation, 210 N Industrial Park Drive, Hastings MI 49058
Telephone: 269-945-9501 Technical Services: 877-384-5464 Fax: 269-818-1680 Email: techsvcs@vikingcorp.com

1. DESCRIPTION

Viking Model E, 3D Spray Nozzles are open type spray nozzles designed for directional spray applications in fixed fire protection systems. They have an open design only (non-automatic) with an external deflector that discharges a solid uniform cone spray of low- to medium- velocity water droplets. Model E Spray Nozzles are available in multiple orifice sizes and spray angles to meet design application requirements and they include a ½" NPT (DN15) external pipe thread. The base materials are brass, while electroless nickel plating may be applied to the complete assembly for applications requiring corrosion resistance.

The spray angle is the included angle of discharge for each nozzle, and is also marked on the deflector. Figures 1a and 1b illustrate the distribution width at various heights based on testing in the pendent position at 10, 20, and 60 PSI (0.7 bar, 1.4 bar, and 4.1 bar) discharge pressures. Note that the Model E Spray Nozzles are rated for a maximum discharge pressure of 175 PSI (12 bar). At pressures above 60 PSI (4.1 bar), the spray pattern begins to decrease in width due to pull-in of the spray pattern. For exposure protection, see Figures 6a, 6b, and 7 for fixed position angle, distance for included angle spray pattern perpendicular to surface of object at the fixed angle of installation.

For nozzles having nominal U.S. K-Factors of 1.2, 1.8, and 2.3, a bushing is used, flush at the inlet location, to eliminate sharp corner cavity and to prevent debris from collecting. (Nozzles with K-Factors of 3.2, 4.1, 5.6, and 7.2 are machined orifices.) Optional blow-off plugs are available for protection from dust and insect infestation and other accumulation of debris.

2. LISTINGS AND APPROVALS

cULus Listed: Category VGYZ

FM Approved: Fixed Extinguishing Systems

NYC Approved: MEA 89-92-E, Volume 29

Refer to the Approval Chart on page 32c and Design Criteria on page 32e for cULus Listing and FM Approval requirements that must be followed.

3. TECHNICAL DATA

Viking Technical Data may be found on The Viking Corporation's Web site at http://www.vikinggroupinc.com. The Web site may include a more recent edition of this Technical Data Page.

Specifications:
Minimum Operating Pressure: 10 psi (0.7 bar)
Maximum Working Pressure: 175 psi (12 bar)
Thread size: 1/2" (15 mm) NPT
Nominal K-Factor: 7.2 U.S. (103.7 metric*)
5.6 U.S. (80.6 metric)
4.1 U.S. (59.0 metric)
3.2 U.S. (46.1 metric)
2.3 U.S. (33.1 metric)
1.8 U.S. (25.9 metric)
1.2 U.S. (17.3 metric)

Orifice sizes are indicated by the K-Factor, which is marked on the deflector. Refer to the Nominal Discharge Curves on page 32f for each nozzle at various operating residual pressures.

* Metric K-factor measurement shown is when pressure is measured in Bar. When pressure is measured in kPa, divide the metric K-factor shown by 10.0.

Overall Length: 2-7/16" (61 mm)

Material Standards:
Body Casting: Brass UNS-C84400
Splitter: Brass UNS-C36000
Bushing: (for nozzles with 1.2, 1.8, and 2.3 K-Factors): Brass UNS-C36000
Deflector: Phosphor Bronze UNS-C51000
Screw: Brass UNS-C65100

Ordering Information: (Also refer to the current Viking price list.)

VIKING®	TECHNICAL DATA	MODEL E SPRAY NOZZLES VK810 - VK817

The Viking Corporation, 210 N Industrial Park Drive, Hastings MI 49058
Telephone: 269-945-9501 Technical Services: 877-384-5464 Fax: 269-818-1680 Email: techsvcs@vikingcorp.com

Order Model E Spray Nozzles by first selecting the appropriate base part number for the K-Factor and spray angle desired. Then add the appropriate suffix for the desired finish and the suffix "Z" for open nozzles to the spray nozzle base part number.
Finish Suffix: Brass = A, Electroless Nickel Plated = J
Temperature Suffix: OPEN = Z
For example, spray nozzle VK810 with a K-Factor of 7.2 (103.7 metric) and a Brass finish = Part No. 12867AZ

Accessories: (Also refer to the "Sprinkler Accessories" section of the Viking data book.)

Sprinkler Wrench: Part No. 10896W/B (available since 2000).

Blow-Off Plugs (Optional): Refer to technical data page 33y. Blow-off plugs are used to prevent the depositing of foreign materials in the waterway, which could interfere with the discharge of the spray nozzles. The plugs are designed to blow off when the system piping is pressurized. **Note:** The blow-off plugs are NOT cULus Listed or FM Approved.

4. INSTALLATION

WARNING: Viking Model E Spray Nozzles are manufactured and tested to meet the rigid requirements of the approving agency. The nozzles are designed to be installed in accordance with recognized installation standards. Deviation from the standards or any alteration to the nozzle after it leaves the factory including, but not limited to: painting, plating, coating, or modification, may render the unit inoperative and will automatically nullify the approval and any guarantee made by The Viking Corporation.

The Approval Chart on page 32c shows listings and approvals of Model E Spray Nozzles for use on water spray systems and water based deluge systems. The chart shows listings and approvals available at the time of printing. Other approvals are in process. Check with the manufacturer for any additional approvals.

A. **Spray nozzles are to be installed in accordance with the latest edition of Viking technical data, the latest published standards of NFPA, FM Global, LPCB, APSAD, VdS or other similar organizations, and also with the provisions of governmental codes, ordinances, and standards whenever applicable. The use of Model E Spray Nozzles may be limited due to occupancy and hazard. Refer to the Authority Having Jurisdiction prior to installation.**
B. Handle Model E Spray Nozzles with care. They must be stored in a cool, dry place in their original shipping container. Never install a spray nozzle that has been dropped or damaged.
C. Corrosion-resistant spray nozzles must be installed when subject to corrosive atmospheres.
D. Spray nozzles must be installed after the piping is in place to prevent mechanical damage.
E. Before installing, be sure to have the appropriate model and style, with the correct K-Factor and spray angle. Spray nozzle deflectors are identified with the VK model number, nominal K-Factor, and spray angle.
   1. Apply a small amount of pipe-joint compound or tape to the external threads of the spray nozzle only, taking care not to allow a build-up of compound inside the inlet.
   2. Install the nozzle on the fixed piping, using the special sprinkler/spray nozzle wrench only. Take care not to over-tighten or damage the spray nozzle. DO NOT use the deflector to start or thread the unit into a fitting.
F. Spray nozzles must be protected from mechanical damage. Where open spray nozzles are used, care must be taken to prevent foreign materials from entering the orifice. Foreign materials may accumulate and restrict or plug the waterway and may prevent proper operation of the spray nozzle.

5. OPERATION

Model E, 3D Spray Nozzles are designed to apply cooling water to exposed vertical, horizontal, curved, and irregular shaped surfaces to allow cooling of objects externally when exposed to an adjacent fire. Cooling is done to prevent objects from absorbing heat that could cause structural damage and possible spread of fire to the protected object. In some applications, Model E Spray Nozzles may be applied to control or extinguish fire of the protected area (depending on water design application density).

6. INSPECTIONS, TESTS AND MAINTENANCE

NOTICE: The owner is responsible for maintaining the fire protection system and devices in proper operating condition. For minimum maintenance and inspection requirements, refer to the NFPA standard (e.g., NFPA 25) that describes care and maintenance of sprinkler systems. In addition, the AHJ may have additional maintenance, testing, and inspection requirements that must be followed.

A. Spray nozzles must be inspected on a regular basis for corrosion, mechanical damage, obstructions, paint, etc. Where open spray nozzles are installed, verify that foreign materials (such as dust, dirt, etc.) DO NOT restrict or plug the waterspray. The frequency of inspections may vary due to corrosive atmospheres, water supplies, and activity around the device. It is also recommended that outdoor installations of Model E Spray Nozzles with blow-off plugs be periodically inspected, during freezing weather conditions, for the presence of ice buildup from trapped condensate which could effect the proper release of the plugs.
B. Spray nozzles that have been painted or mechanically damaged must be replaced immediately. Nozzles showing signs of corrosion shall be tested and/or replaced immediately as required. When replacing spray nozzles, use only new Model E Spray Nozzles.

The Viking Corporation, 210 N Industrial Park Drive, Hastings MI 49058
Telephone: 269-945-9501 Technical Services: 877-384-5464 Fax: 269-818-1680 Email: techsvcs@vikingcorp.com

1. Using the appropriate wrench, remove the old spray nozzle and install the new unit. Care must be taken to ensure that the replacement spray nozzle has the proper model, style, and K-Factor. Model E Spray Nozzle deflectors are identified with the VK model number, nominal U.S. K-Factor, and spray angle. A cabinet should be provided and stocked with a wrench and extra spray nozzles of each variety used for replacement purposes.

C. The spray nozzle discharge pattern is critical for proper fire protection. Therefore, nothing should be hung from, attached to, or otherwise obstruct the discharge pattern. All obstructions must be immediately removed or, if necessary, additional nozzles installed.

D. Fire protection systems that have been subjected to a fire must be returned to service as soon as possible. The entire system must be inspected for damage and repaired or replaced as necessary. Spray nozzles that have been exposed to corrosive products of combustion or high ambient temperatures, should be replaced. Refer to the AHJ for minimum replacement requirements.

7. AVAILABILITY

Viking Model E Spray Nozzles are available through a network of domestic and international distributors. See The Viking Corporation web site for the closest distributor or contact The Viking Corporation.

8. GUARANTEE

For details of warranty, refer to Viking's current list price schedule or contact Viking directly.

VIKING®

TECHNICAL DATA

MODEL E SPRAY NOZZLES VK810 - VK817

The Viking Corporation, 210 N Industrial Park Drive, Hastings MI 49058
Telephone: 269-945-9501 Technical Services: 877-384-5464 Fax: 269-818-1680 Email: techsvcs@vikingcorp.com

Approval Chart

Model E Spray Nozzles
Maximum 175 PSI (12 bar) WWP
(Refer also to Design Criteria on page 32e.)

Base Part Number[1]	SIN[2]	Nominal K-Factor		Angle	Listings and Approvals[4]			Base Part Number[1]	SIN[2]	Nominal K-Factor		Angle	Listings and Approvals[4]		
		U.S.	metric[3]		cULus[5]	NYC[6]	FM			U.S.	metric[3]		cULus[5]	NYC[6]	FM
12867	VK810	7.2	103.7	65°	Yes	Yes	Yes	12895	VK814	7.2	103.7	125°	Yes	Yes	Yes
12868	VK810	5.6	80.6	65°	Yes	Yes	Yes	12896	VK814	5.6	80.6	125°	Yes	Yes	Yes
12869	VK810	4.1	59.0	65°	Yes	Yes	Yes	12897	VK814	4.1	59.0	125°	Yes	Yes	Yes
12870	VK810	3.2	46.1	65°	Yes	Yes	Yes[7]	12898	VK814	3.2	46.1	125°	Yes	Yes	Yes[7]
12871	VK810	2.3	33.1	65°	Yes	Yes	Yes[7]	12899	VK814	2.3	33.1	125°	Yes	Yes	Yes[7]
12872	VK810	1.8	25.9	65°	Yes	Yes	Yes[7]	12900	VK814	1.8	25.9	125°	Yes	Yes	Yes[7]
12873	VK810	1.2	17.3	65°	Yes	Yes	Yes[7]	12901	VK814	1.2	17.3	125°	Yes	Yes	Yes[7]
12874	VK811	7.2	103.7	80°	Yes	Yes	Yes	12902	VK815	7.2	103.7	140°	Yes	Yes	Yes
12875	VK811	5.6	80.6	80°	Yes	Yes	Yes	12903	VK815	5.6	80.6	140°	Yes	Yes	Yes
12876	VK811	4.1	59.0	80°	Yes	Yes	Yes	12904	VK815	4.1	59.0	140°	Yes	Yes	Yes
12877	VK811	3.2	46.1	80°	Yes	Yes	Yes[7]	12905	VK815	3.2	46.1	140°	Yes	Yes	Yes[7]
12878	VK811	2.3	33.1	80°	Yes	Yes	Yes[7]	12906	VK815	2.3	33.1	140°	Yes	Yes	Yes[7]
12879	VK811	1.8	25.9	80°	Yes	Yes	Yes[7]	12907	VK815	1.8	25.9	140°	Yes	Yes	Yes[7]
12880	VK811	1.2	17.3	80°	Yes	Yes	Yes[7]	12908	VK815	1.2	17.3	140°	Yes	Yes	Yes[7]
12881	VK812	7.2	103.7	95°	Yes	Yes	Yes	12909	VK816	7.2	103.7	160°	Yes	Yes	Yes
12882	VK812	5.6	80.6	95°	Yes	Yes	Yes	12910	VK816	5.6	80.6	160°	Yes	Yes	Yes
12883	VK812	4.1	59.0	95°	Yes	Yes	Yes	12911	VK816	4.1	59.0	160°	Yes	Yes	Yes
12884	VK812	3.2	46.1	95°	Yes	Yes	Yes[7]	12912	VK816	3.2	46.1	160°	Yes	Yes	Yes[7]
12885	VK812	2.3	33.1	95°	Yes	Yes	Yes[7]	12913	VK816	2.3	33.1	160°	Yes	Yes	Yes[7]
12886	VK812	1.8	25.9	95°	Yes	Yes	Yes[7]	12914	VK816	1.8	25.9	160°	Yes	Yes	Yes[7]
12887	VK812	1.2	17.3	95°	Yes	Yes	Yes[7]	12915	VK816	1.2	17.3	160°	Yes	Yes	Yes[7]
12888	VK813	7.2	103.7	110°	Yes	Yes	Yes	12916	VK817	7.2	103.7	180°	Yes	Yes	Yes
12889	VK813	5.6	80.6	110°	Yes	Yes	Yes	12917	VK817	5.6	80.6	180°	Yes	Yes	Yes
12890	VK813	4.1	59.0	110°	Yes	Yes	Yes	12918	VK817	4.1	59.0	180°	Yes	Yes	Yes
12891	VK813	3.2	46.1	110°	Yes	Yes	Yes[7]	12919	VK817	3.2	46.1	180°	Yes	Yes	Yes[7]
12892	VK813	2.3	33.1	110°	Yes	Yes	Yes[7]	12920	VK817	2.3	33.1	180°	Yes	Yes	Yes[7]
12893	VK813	1.8	25.9	110°	Yes	Yes	Yes[7]	12921	VK817	1.8	25.9	180°	Yes	Yes	Yes[7]
12894	VK813	1.2	17.3	110°	Yes	Yes	Yes[7]	12922	VK817	1.2	17.3	180°	Yes	Yes	Yes[7]

Available Finishes: Brass or Electroless Nickel Plated[8]

Footnotes

[1] Base part number is shown. For complete part number, refer to Viking's current price schedule.
[2] The spray nozzle deflector is identified with the VK model number, K-Factor, and spray angle.
[3] Metric K-factor shown is for use when pressure is measured in bar. When pressure is measured in kPa, divide the metric K-factor shown by 10.0.
[4] This table shows the listings and approvals available at the time of printing. Check with the manufacturer for any additional approvals.
[5] Listed by Underwriters Laboratories Inc. for use in the U.S. and Canada.
[6] Accepted for use, City of New York Department of Buildings, MEA Number 89-92-E, Vol. 29.
[7] Orifice diameter is less than 3/8" (9.4 mm) for Model E Nozzles with K-Factors of 3.2, 2.3, 1.8, and 1.2. A pipeline strainer with a 1/8" (3.2 mm) or less perforation is required for FM Approval.
[8] For corrosion resistance.

VIKING®

TECHNICAL DATA

MODEL E SPRAY NOZZLES VK810 - VK817

The Viking Corporation, 210 N Industrial Park Drive, Hastings MI 49058
Telephone: 269-945-9501 Technical Services: 877-384-5464 Fax: 269-818-1680 Email: techsvcs@vikingcorp.com

DESIGN CRITERIA

(Also refer to the Approval Chart on page 32c.)

Nozzle Placement

When the Authority Having Jurisdiction requires direct impingement of water spray of the complete protected surface, the nozzles should be spaced and directed so their spray pattern will completely cover the surface plane of the protected object or area. Use the minimum required average density based on the included angle and the K-Factor based on the residual pressure at the inlet of the nozzles. Figures 1a and 1b indicate the coverage for each nozzle's included spray angle at various heights. Recommendation: Limit the maximum spacing of nozzles to 12 ft. (3.6 m) or less for indoor applications and 10 ft. (3 m) or less for outdoor applications. For exposure protection of vessels using rundown and slippage, e.g., exposure protection of vessels per NFPA 15 section 7.4.2 (2007 edition), the preceding recommendations apply.

Figures 6a and 6b indicate the distance from the nozzles to the tangent surface of the protected object at various fixed angles. The fixed angle is the included angle from pendent position being zero of spray nozzle position. The spray angle is the included angle of the spray nozzle pattern. The maximum distance is determined where the spray pattern angle is unchanged at the perpendicular position to tangent of fixed angle. The distances indicated are for 20 PSI (1.4 Bar) minimum, to 60 PSI (4.1 Bar) maximum residual pressure at the inlet of the nozzles. When Viking Model E Spay Nozzles are used to protect surfaces of vessels, they should be positioned normal to the surface being protected and approximately 2 ft. (.6 m) from the surface. Using the proper spray angle and K-Factor with this approach will provide the most effective protection and minimize effects of wind or draft conditions on the water spray pattern of the nozzles.

Installation Precaution

As a nozzle is being installed farther from the plane of protection, the centerline that is perpendicular to the plane of protection is potentially offset with the center/target of plane of protection due to installation error. Take extra care when locating a nozzle far from the plane of protection. Recommendation: Overlap spray patterns to provide a safety factor in the installation.

Notes About Pressure Requirements (Figures 6a & 6b)

1. Working pressures of 10 to 60 PSI (.7 to 4.1 Bar) can only be applied for 0° (vertically downward) orientation.
2. Working pressures for orientation angles other than 0° are 20 to 60 PSI (1.4 to 4.1 Bar).
3. However, unless otherwise specified, when the nozzles are axially installed 2 ft. (.6 m) or less from the plane of protection, working pressures of 10 to 60 PSI (.7 to 4.1 Bar) can be applied on all installation angles.

Spray Patterns

The design spray pattern profiles of the Model E Spray Nozzles with included spray angles of 65° to 180° are given in the graph in Figures 1a and 1b for discharge pressures from 10 to 60 PSI (.7 to 4.1 Bar). When discharge pressures above this are applied, the coverage area will decrease because the spray pattern tends to draw inward at higher pressures. When applying discharge pressures higher than 60 PSI (4.1 Bar), consult the Viking Technical Services department.

In Figures 6a and 6b, the maximum axial distance between the nozzle tip and the tangential plane being protected using a fixed installation angle is given. The operating discharge pressures are 20 PSI to 60 PSI (1.4 to 4.1 Bar) for application of this data. It is recommended that overlap be applied when using nozzles for exposure protection in this method.

Pipline Strainers

Orifice diameter is less than 3/8" (9.4 mm) for Model E Nozzles with K-Factors of 3.2, 2.3, 1.8, and 1.2. A pipeline strainer with a 1/8" (3.2 mm) or less perforation is required for FM Approval.

IMPORTANT: Always refer to Bulletin Form No. F_091699 - Care and Handling of Sprinklers. Viking spray nozzles are to be installed in accordance with the latest edition of Viking technical data, the appropriate standards of NFPA, FM Global, LPCB, APSAD, VdS or other similar organizations, and also with the provisions of governmental codes, ordinances, and standards, whenever applicable.

VIKING®

TECHNICAL DATA

MODEL E SPRAY NOZZLES VK810 - VK817

The Viking Corporation, 210 N Industrial Park Drive, Hastings MI 49058
Telephone: 269-945-9501 Technical Services: 877-384-5464 Fax: 269-818-1680 Email: techsvcs@vikingcorp.com

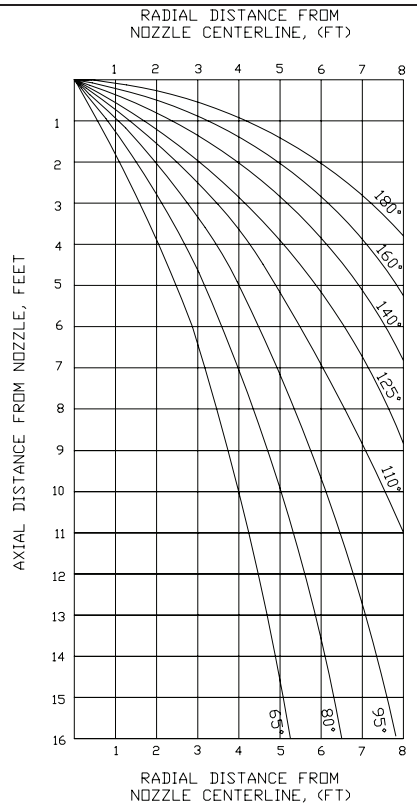

Figure 1a: Design Spray Profiles (feet)

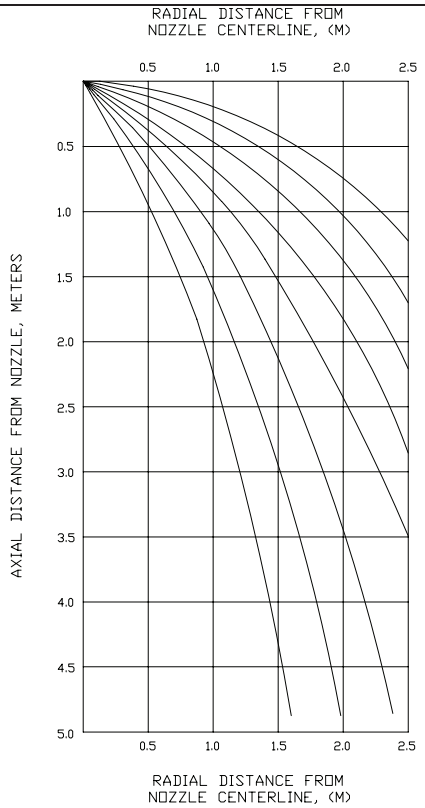

Figure 1b: Design Spray Profiles (meters)

NOTES:

1. Design data was obtained from tests in still air.
2. Design data applies to a residual (flowing) pressure range at the nozzle inlet of 10 to 60 PSI (.7 to 4.1 Bar). For pressures up to 175 PSI (12 Bar), consult the Viking Technical Services department toll free at 1-877-384-5464. Refer to the Authority Having Jurisdiction for their minimum required residual pressure.
3. The shapes of the Design Spray Profiles remain essentially unchanged over the maximum Axial Distances shown on pages 32h-i.
4. Maximum Axial Distances shown on pages 32h-i are based on exposure protection.

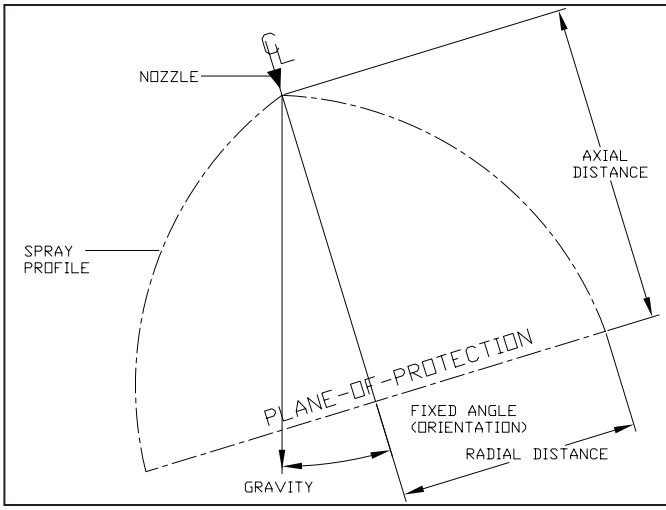

Figure 2: Design Spray Profile

VIKING®

TECHNICAL DATA

MODEL E SPRAY NOZZLES VK810 - VK817

The Viking Corporation, 210 N Industrial Park Drive, Hastings MI 49058
Telephone: 269-945-9501 Technical Services: 877-384-5464 Fax: 269-818-1680 Email: techsvcs@vikingcorp.com

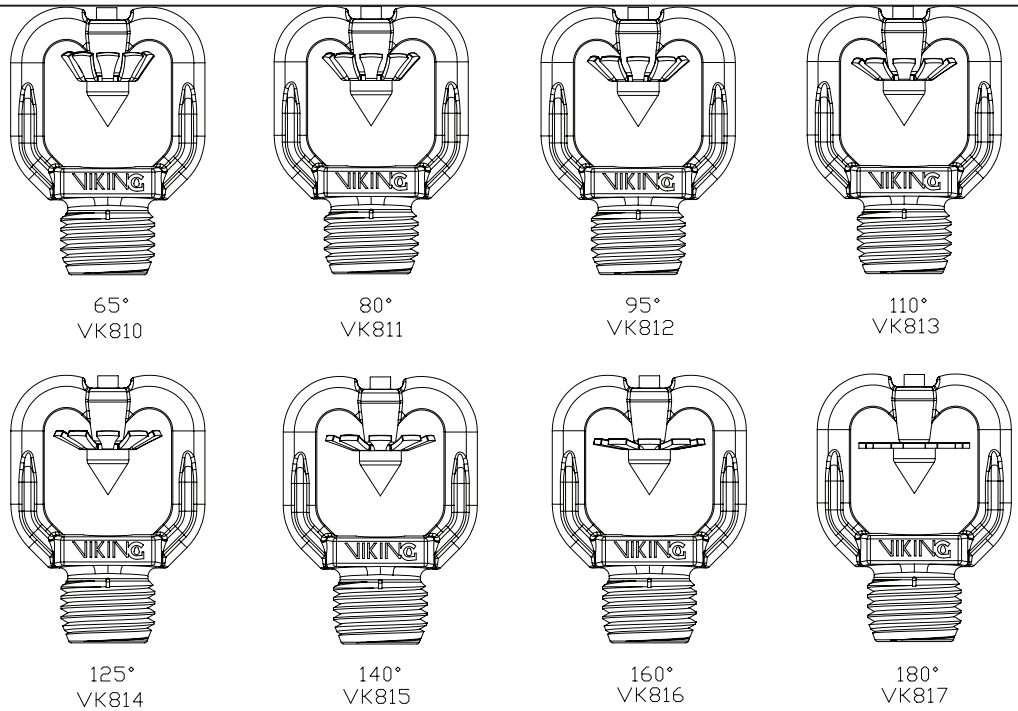

Figure 3: Spray Angles

Nozzles are shown with deflectors in the upright position for clarity.
May be installed in any position to meet design requirements.

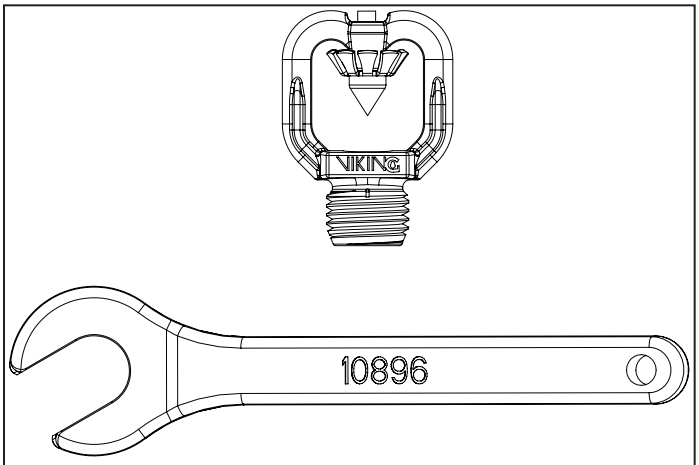

Figure 4: Standard Wrench 10896W/B

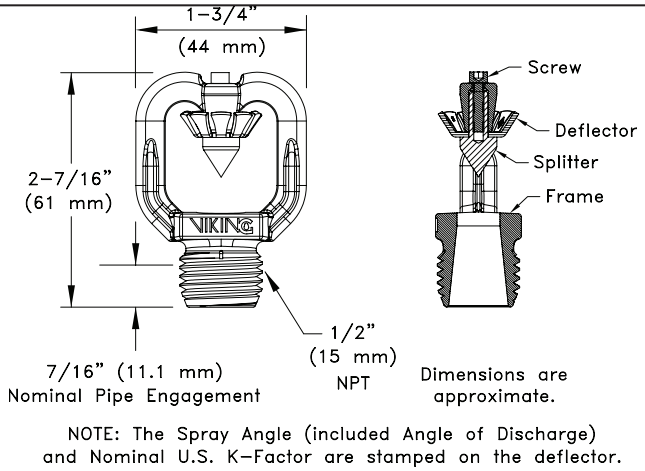

NOTE: The Spray Angle (included Angle of Discharge) and Nominal U.S. K–Factor are stamped on the deflector.

Figure 5: Spray Nozzle Dimensions

VIKING®

TECHNICAL DATA

MODEL E SPRAY NOZZLES VK810 - VK817

The Viking Corporation, 210 N Industrial Park Drive, Hastings MI 49058
Telephone: 269-945-9501 Technical Services: 877-384-5464 Fax: 269-818-1680 Email: techsvcs@vikingcorp.com

MAXIMUM AXIAL DISTANCE FOR **65°** SPRAY ANGLE IN FEET AND INCHES

FIXED ANGLE	K FACTOR						
	1.2	**1.8**	**2.3**	**3.2**	**4.1**	**5.6**	**7.2**
0°	16-0	16-0	16-0	16-0	16-0	16-0	16-0
30°	10	10-0	10-3	10-6	11-0	11-6	12-0
45°	8-0	8-0	8-3	8-9	9-0	9-6	10-0
60°	7-0	7-0	7-6	8-3	8-6	8-9	9-0
90°	6-6	6-9	7-0	7-6	8-0	8-0	8-6
120°	6-3	6-3	6-6	7-0	7-6	7-6	8-0
135°	6-0	6-0	6-3	6-6	7-0	7-0	7-6
150°	5-9	5-9	6-0	6-0	6-6	6-9	7-0
180°	5-0	5-0	5-3	5-6	6-0	6-6	6-9

MAXIMUM AXIAL DISTANCE FOR **125°** SPRAY ANGLE IN FEET AND INCHES

FIXED ANGLE	K FACTOR						
	1.2	**1.8**	**2.3**	**3.2**	**4.1**	**5.6**	**7.2**
0°	9-0	9-0	9-0	9-0	9-0	9-0	9-0
30°	4-9	4-9	5-3	6-0	7-0	7-3	8-0
45°	4-6	4-6	4-9	5-0	6-0	6-6	7-0
60°	3-6	3-6	3-9	4-0	5-0	5-6	6-0
90°	3-0	3-0	3-3	3-6	4-6	4-9	5-6
120°	2-0	2-0	2-6	3-3	3-9	3-9	4-0
135°	1-9	1-9	2-3	3-0	3-6	3-6	3-9
150°	1-6	1-9	2-3	2-6	3-0	3-3	3-6
180°	1-3	1-6	2-0	2-6	2-9	3-0	3-3

MAXIMUM AXIAL DISTANCE FOR **80°** SPRAY ANGLE IN FEET AND INCHES

FIXED ANGLE	K FACTOR						
	1.2	**1.8**	**2.3**	**3.2**	**4.1**	**5.6**	**7.2**
0°	16-0	16-0	16-0	16-0	16-0	16-0	16-0
30°	9-6	9-6	10-0	10-6	11-0	11-3	11-6
45°	7-6	7-6	8-0	8-3	8-6	9-0	9-9
60°	6-0	6-3	6-6	7-0	7-0	8-0	8-6
90°	5-6	6-0	6-3	6-6	6-9	7-6	8-0
120°	5-0	5-3	5-9	6-0	6-6	6-6	7-0
135°	4-6	5-3	5-6	5-9	6-0	6-3	6-6
150°	4-3	4-6	4-9	5-6	5-9	6-0	6-0
180°	4-0	4-3	4-6	5-3	5-6	5-9	5-9

MAXIMUM AXIAL DISTANCE FOR **140°** SPRAY ANGLE IN FEET AND INCHES

FIXED ANGLE	K FACTOR						
	1.2	**1.8**	**2.3**	**3.2**	**4.1**	**5.6**	**7.2**
0°	7-0	7-0	7-0	7-0	7-0	7-0	7-0
30°	3-6	4-0	4-6	5-0	5-6	5-6	6-0
45°	3-3	3-6	3-9	4-3	4-6	5-0	5-3
60°	2-3	2-3	2-6	3-6	4-0	4-3	4-6
90°	2-0	2-0	2-9	3-0	3-6	3-6	4-0
120°	1-9	1-9	2-3	2-9	3-0	3-3	3-6
135°	1-6	1-6	1-9	2-3	2-6	2-9	3-0
150°	1-3	1-3	1-6	1-9	2-0	2-3	2-6
180°	1-0	1-0	1-6	1-6	1-9	2-0	2-3

MAXIMUM AXIAL DISTANCE FOR **95°** SPRAY ANGLE IN FEET AND INCHES

FIXED ANGLE	K FACTOR						
	1.2	**1.8**	**2.3**	**3.2**	**4.1**	**5.6**	**7.2**
0°	16-0	16-0	16-0	16-0	16-0	16-0	16-0
30°	8-0	8-3	9-0	9-6	10-6	11-0	11-6
45°	7-0	7-0	7-3	7-6	8-0	8-9	9-6
60°	5-0	5-3	5-6	6-3	6-6	7-0	8-0
90°	4-6	5-0	5-3	5-6	6-0	6-6	7-0
120°	4-0	4-3	4-9	5-3	5-6	5-6	6-0
135°	3-6	3-9	4-3	4-9	5-0	5-3	5-6
150°	3-3	3-6	3-6	4-6	4-9	5-0	5-0
180°	3-0	3-3	3-3	4-0	4-6	4-9	4-9

MAXIMUM AXIAL DISTANCE FOR **160°** SPRAY ANGLE IN FEET AND INCHES

FIXED ANGLE	K FACTOR						
	1.2	**1.8**	**2.3**	**3.2**	**4.1**	**5.6**	**7.2**
0°	5-6	5-6	5-6	5-6	5-6	5-6	5-6
30°	4-0	4-0	4-0	4-3	4-9	4-9	5-0
45°	3-0	3-0	3-3	3-6	3-9	3-9	4-0
60°	2-0	2-0	2-0	2-6	3-0	3-3	3-3
90°	1-0	1-3	1-9	2-0	2-6	2-6	3-0
120°	NR	1-0	1-6	1-9	2-0	2-3	2-6
135°	NR	NR	1.0	1-6	1-9	1-9	2-0
150°	NR	NR	NR	1-0	1-2	1-6	1-9
180°	NR	NR	NR	1-0	1-0	1-3	1-6

MAXIMUM AXIAL DISTANCE FOR **110°** SPRAY ANGLE IN FEET AND INCHES

FIXED ANGLE	K FACTOR						
	1.2	**1.8**	**2.3**	**3.2**	**4.1**	**5.6**	**7.2**
0°	11-0	11-0	11-0	11-0	11-0	11-0	11-0
30°	6-6	6-6	7-3	8-3	9-0	9-3	9-6
45°	5-6	5-9	6-6	7-0	7-6	8-0	8-6
60°	4-9	5-0	5-3	5-6	6-0	7-0	7-6
90°	4-0	4-0	4-6	5-0	5-6	6-0	6-6
120°	3-0	3-3	3-9	4-0	4-6	4-9	5-0
135°	2-9	2-9	3-3	3-9	4-3	4-6	4-9
150°	2-6	2-9	3-0	3-6	3-9	4-2	4-6
180°	2-3	2-6	3-0	3-3	3-6	4-0	4-3

MAXIMUM AXIAL DISTANCE FOR **180°** SPRAY ANGLE IN FEET AND INCHES

FIXED ANGLE	K FACTOR						
	1.2	**1.8**	**2.3**	**3.2**	**4.1**	**5.6**	**7.2**
0°	4-0	4-0	4-0	4-0	4-0	4-0	4-0
30°	2-3	2-3	2-6	2-9	3-0	3-0	3-0
45°	2-0	2-0	2-0	2-3	2-6	2-9	2-9
60°	1-6	1-6	1-9	2-0	2-3	2-6	2-6
90°	NR	NR	1-0	1-0	1-6	1-9	2-3
120°	NR	NR	1-0	1-0	1-3	1-6	1-9
135°	NR	NR	NR	1-0	1-0	1-3	1-6
150°	NR	NR	NR	NR	1-0	1-3	1-3
180°	NR	NR	NR	NR	NR	1-0	1-0

NR = Not Recommended

Figure 6a: Maximum Axial Distance Between Nozzle Tip and Plane of Protection for Exposure Protection (ft)

NOTES ABOUT FIGURES 6a AND 6b:

1. Working pressures of 10 to 60 PSI (.7 to 4.1 Bar) can only be applied for 0° (vertically downward) orientation.
2. Working pressures for orientation angles other than 0° are 20 to 60 PSI (1.4 to 4.1 Bar).
3. However, unless otherwise specified, when the nozzles are axially installed 2 ft. (.6 m) or less from the plane of protection, working pressures of 10 to 60 PSI (.7 to 4.1 Bar) can be applied on all installation angles.

VIKING®

TECHNICAL DATA

MODEL E SPRAY NOZZLES VK810 - VK817

The Viking Corporation, 210 N Industrial Park Drive, Hastings MI 49058
Telephone: 269-945-9501 Technical Services: 877-384-5464 Fax: 269-818-1680 Email: techsvcs@vikingcorp.com

MAXIMUM AXIAL DISTANCE FOR 65° SPRAY ANGLE IN METERS							
FIXED ANGLE	K FACTOR (METRIC)						
	17.3	25.9	33.1	46.1	59.0	80.6	103.7
0°	4,9	4,9	4,9	4,9	4,9	4,9	4,9
30°	3,0	3,0	3,1	3,2	3,4	3,5	3,7
45°	2,4	2,4	2,5	2,7	2,7	2,9	3,0
60°	2,1	2,1	2,3	2,5	2,6	2,7	2,7
90°	2,0	2,1	2,1	2,3	2,4	2,4	2,6
120°	1,9	1,9	2,0	2,1	2,3	2,3	2,4
135°	1,8	1,8	1,9	2,0	2,1	2,1	2,3
150°	1,8	1,8	1,8	1,8	2,0	2,1	2,1
180°	1,5	1,5	1,6	1,7	1,8	2,0	2,1

MAXIMUM AXIAL DISTANCE FOR 125° SPRAY ANGLE IN METERS							
FIXED ANGLE	K FACTOR (METRIC)						
	17.3	25.9	33.1	46.1	59.0	80.6	103.7
0°	2,7	2,7	2,7	2,7	2,7	2,7	2,7
30°	1,4	1,4	1,6	1,8	2,1	2,2	2,4
45°	1,4	1,4	1,4	1,5	1,8	2,0	2,1
60°	1,1	1,1	1,1	1,2	1,5	1,7	1,8
90°	0,9	0,9	1,0	1,1	1,4	1,4	1,7
120°	0,6	0,6	0,8	1,0	1,1	1,1	1,2
135°	0,5	0,5	0,7	0,9	1,1	1,1	1,1
150°	0,5	0,5	0,7	0,8	0,9	1,0	1,1
180°	0,4	0,5	0,6	0,8	0,8	0,9	1,0

MAXIMUM AXIAL DISTANCE FOR 80° SPRAY ANGLE IN METERS							
FIXED ANGLE	K FACTOR (METRIC)						
	17.3	25.9	33.1	46.1	59.0	80.6	103.7
0°	4,9	4,9	4,9	4,9	4,9	4,9	4,9
30°	3,0	3,0	3,0	3,2	3,4	3,4	3,5
45°	2,3	2,3	2,4	2,5	2,6	2,7	3,0
60°	1,8	1,9	2,0	2,1	2,1	2,4	2,6
90°	1,7	1,8	1,9	2,0	2,1	2,3	2,4
120°	1,5	1,6	1,8	1,8	2,0	2,0	2,1
135°	1,4	1,6	1,7	1,8	1,8	1,9	2,0
150°	1,3	1,4	1,4	1,7	1,8	1,8	1,8
180°	1,2	1,3	1,4	1,6	1,7	1,8	1,8

MAXIMUM AXIAL DISTANCE FOR 140° SPRAY ANGLE IN METERS							
FIXED ANGLE	K FACTOR (METRIC)						
	17.3	25.9	33.1	46.1	59.0	80.6	103.7
0°	2,1	2,1	2,1	2,1	2,1	2,1	2,1
30°	1,1	1,2	1,4	1,5	1,7	1,7	1,8
45°	1,0	1,1	1,1	1,3	1,4	1,5	1,6
60°	0,7	0,7	0,8	1,1	1,2	1,3	1,4
90°	0,6	0,6	0,8	0,9	1,1	1,1	1,2
120°	0,5	0,5	0,7	0,8	0,9	1,0	1,1
135°	0,5	0,5	0,5	0,7	0,8	0,8	0,9
150°	0,4	0,4	0,5	0,5	0,6	0,7	0,8
180°	0,3	0,3	0,5	0,5	0,5	0,6	0,7

MAXIMUM AXIAL DISTANCE FOR 95° SPRAY ANGLE IN METERS							
FIXED ANGLE	K FACTOR (METRIC)						
	17.3	25.9	33.1	46.1	59.0	80.6	103.7
0°	4,9	4,9	4,9	4,9	4,9	4,9	4,9
30°	2,4	2,5	2,7	2,9	3,2	3,4	3,5
45°	2,1	2,1	2,2	2,3	2,4	2,7	2,9
60°	1,5	1,6	1,7	1,9	2,0	2,1	2,4
90°	1,4	1,5	1,6	1,7	1,8	2,0	2,1
120°	1,2	1,3	1,4	1,6	1,7	1,7	1,8
135°	1,1	1,1	1,3	1,4	1,5	1,6	1,7
150°	1,0	1,1	1,1	1,4	1,4	1,5	1,5
180°	0,9	1,0	1,0	1,2	1,4	1,4	1,4

MAXIMUM AXIAL DISTANCE FOR 160° SPRAY ANGLE IN METERS							
FIXED ANGLE	K FACTOR (METRIC)						
	17.3	25.9	33.1	46.1	59.0	80.6	103.7
0°	1,7	1,7	1,7	1,7	1,7	1,7	1,7
30°	4,3	1,2	1,2	1,3	1,4	1,4	1,5
45°	0,9	0,9	1,0	1,1	1,1	1,1	1,2
60°	0,6	0,6	0,6	0,8	0,9	1,0	1,0
90°	0,3	0,4	0,5	0,6	0,8	0,8	0,9
120°	NR	0,3	0,4	0,5	0,6	0,7	0,8
135°	NR	NR	0,3	0,5	0,5	0,5	0,6
150°	NR	NR	NR	0,3	0,4	0,5	0,5
180°	NR	NR	NR	0,3	0,3	0,4	0,5

MAXIMUM AXIAL DISTANCE FOR 110° SPRAY ANGLE IN METERS							
FIXED ANGLE	K FACTOR (METRIC)						
	17.3	25.9	33.1	46.1	59.0	80.6	103.7
0°	3,4	3,4	3,4	3,4	3,4	3,4	3,4
30°	2,0	2,0	2,2	2,5	2,7	2,8	3,0
45°	1,7	1,8	2,0	2,1	2,3	2,4	2,6
60°	1,4	1,5	1,6	1,7	1,8	2,1	2,2
90°	1,2	1,2	1,4	1,5	1,7	1,8	2,0
120°	0,9	1,0	1,1	1,2	1,4	1,4	1,5
135°	0,8	0,8	1,0	1,1	1,3	1,4	1,4
150°	0,8	0,8	0,9	1,1	1,1	1,3	1,4
180°	0,7	0,8	0,9	0,9	1,1	1,2	1,3

MAXIMUM AXIAL DISTANCE FOR 180° SPRAY ANGLE IN METERS							
FIXED ANGLE	K FACTOR (METRIC)						
	17.3	25.9	33.1	46.1	59.0	80.6	103.7
0°	1,2	1,2	1,2	1,2	1,2	1,2	1,2
30°	0,7	0,7	0,8	0,8	0,9	0,9	0,9
45°	0,6	0,6	0,6	0,7	0,8	0,8	0,8
60°	0,5	0,5	0,5	0,6	0,7	0,8	0,8
90°	NR	NR	0,3	0,3	0,5	0,5	0,7
120°	NR	NR	0,3	0,3	0,4	0,5	0,5
135°	NR	NR	NR	0,3	0,3	0,4	0,5
150°	NR	NR	NR	NR	0,3	0,4	0,4
180°	NR	NR	NR	NR	NR	0,3	0,3

NR = Not Recommended

Figure 6b: Maximum Axial Distance Between Nozzle Tip and Plane of Protection for Exposure Protection (m)

NOTES ABOUT FIGURES 6a AND 6b:

1. Working pressures of 10 to 60 PSI (.7 to 4.1 Bar) can only be applied for 0° (vertically downward) orientation.
2. Working pressures for orientation angles other than 0° are 20 to 60 PSI (1.4 to 4.1 Bar).
3. However, unless otherwise specified, when the nozzles are axially installed 2 ft. (.6 m) or less from the plane of protection, working pressures of 10 to 60 PSI (.7 to 4.1 Bar) can be applied on all installation angles.

VIKING®

TECHNICAL DATA

MODEL E SPRAY NOZZLES VK810 - VK817

The Viking Corporation, 210 N Industrial Park Drive, Hastings MI 49058
Telephone: 269-945-9501 Technical Services: 877-384-5464 Fax: 269-818-1680 Email: techsvcs@vikingcorp.com

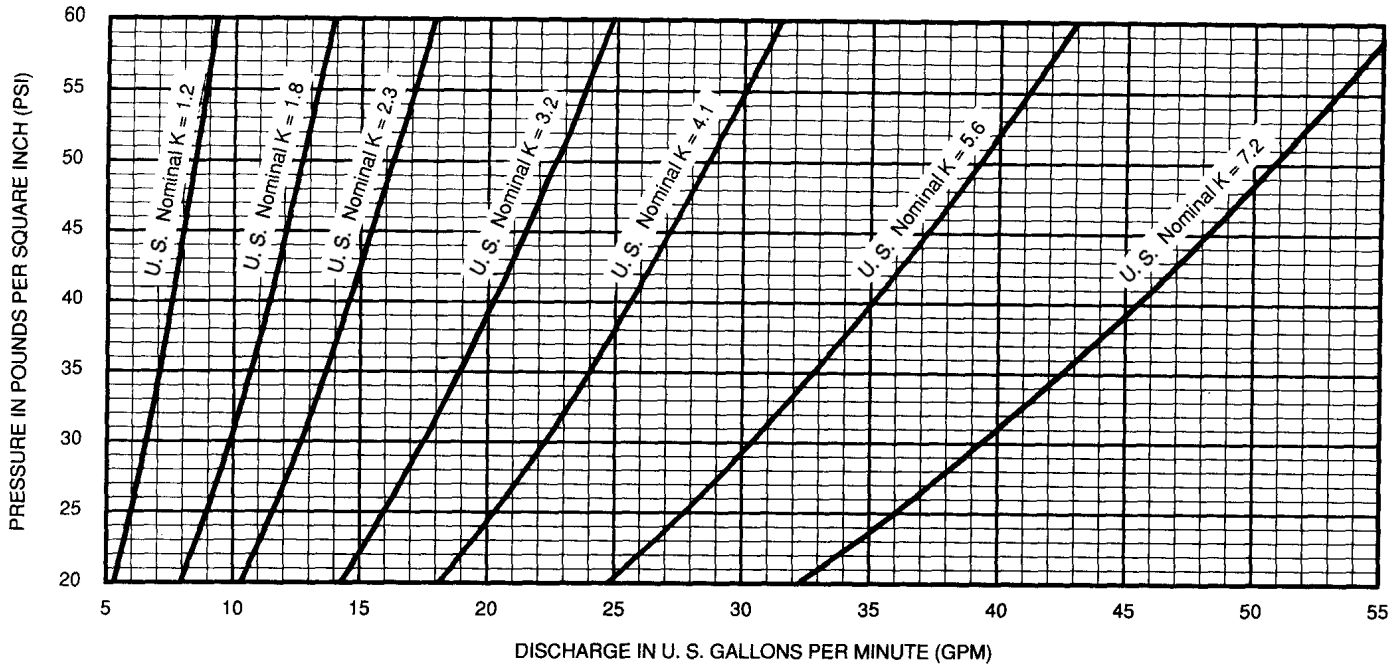

NOTE: $Q = K\sqrt{p}$; where "Q" = flow in U.S. gallons per minute, "p" = pressure in pounds per square inch, and "K" is the nominal discharge coefficient.

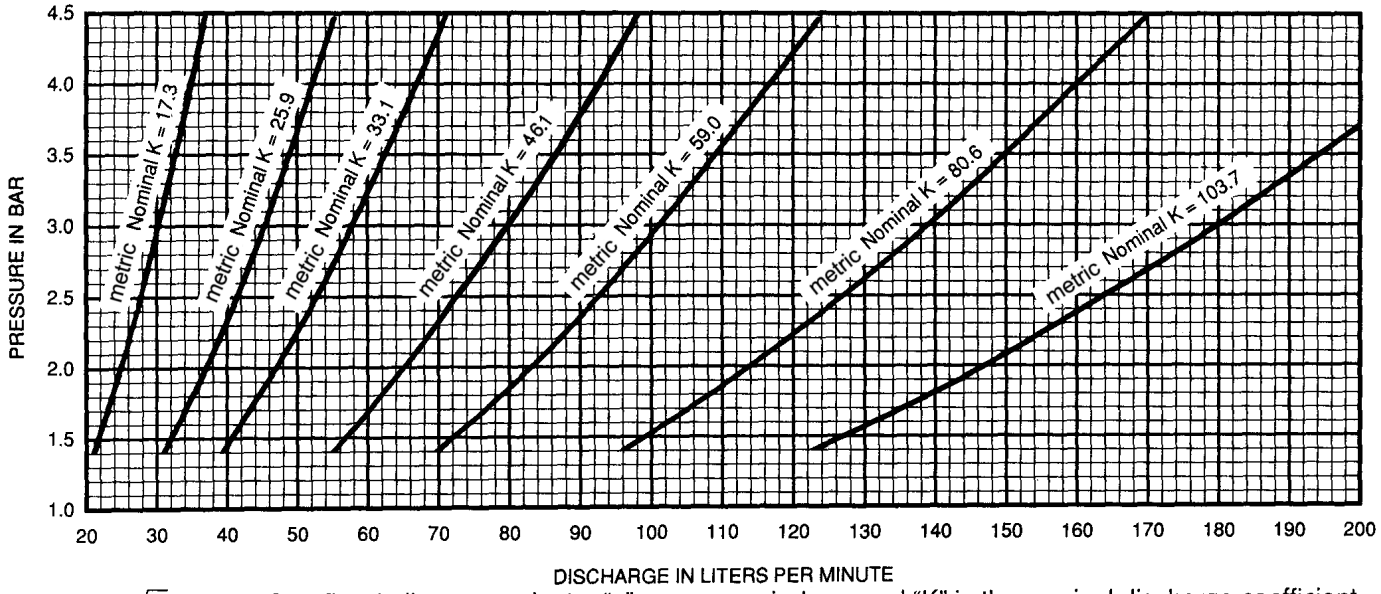

NOTE: $Q = K\sqrt{p}$; where "Q" = flow in liters per minute, "p" = pressure in bar , and "K" is the nominal discharge coefficient.

Figure 7: Nominal Discharge Curves
(Refer to the Authority Having Jurisdiction for Their Minimum Required Residual Pressure.)

Replaces page 32a-g, dated December 12, 2008.
(Changed deflector material to Phosphor Bronze.)

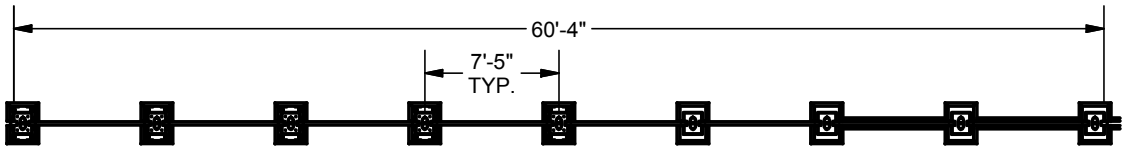

PLAN VIEW- WALL A

NOT TO SCALE

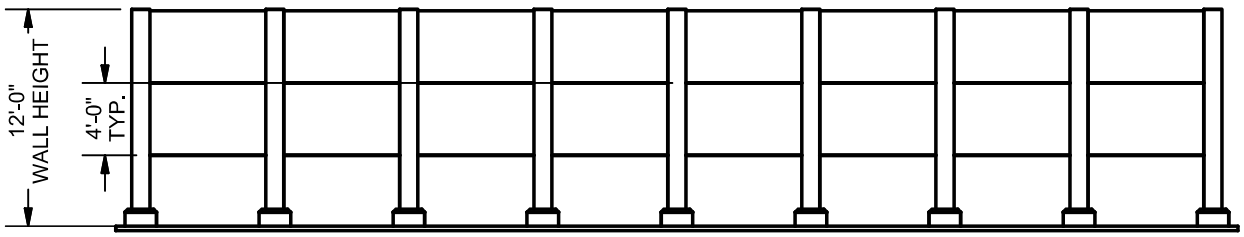

ELEVATION VIEW - WALL A

NOT TO SCALE

DESIGN NOTES

STRUCTURAL NOTES

1. WIND (PER ASCE7-05)
   a. BASIC WIND SPEED = 90 MPH
   b. EXPOSURE CATEGORY = C
2. SEISMIC (PER ASCE7-05)
   a. Ss = 0.127 g
   b. S1 = 0.059 g
   c. SITE CLASS =D
   d. LONG PERIOD TRANSITION PERIOD = 12 sec
3. GENERAL (PER ASCE7-05)
   a. OCCUPANCY CATEGORY = III

MATERIAL NOTES

1. REFRACTORY CONCRETE
   a. 28-DAY COMPRESSIVE STRENGTH = 6,500 PSI
   b. MODULUS OF RUPTURE = 950 PSI
   c. CONCRETE UNIT WEIGHT = 135 PCF
   d. PANELS TO INCLUDE STAINLESS STEEL FIBERS
   e. REFRACTORY MATERIAL MEETS 4-HOUR FIRE RATING
2. MAIN REINFORCING
   a. ASTM A-615
   b. 80 KSI YIELD STRENGTH
3. STIRRUP REINFORCING
   a. ASTM A-615 GR 60
4. BASE PLATE
   a. ASTM A-572 GR 50
   b. GALVANIZED PER ASTM A-123
5. ANCHOR BOLTS/NUTS/WASHER
   a. ASTM F-1554 GR.55
   b. GALVANIZED PER ASTM A-153
6. FOOTING REQUIREMENTS
   a. f'c = 4000 PSI
   b. REBAR PER ASTM A-615 GR 60

INSTALLATION NOTES

1. SITE ERECTOR TO ENSURE ALL OSHA REGULATIONS ARE FOLLOWED DURING INSTALLATION.
2. CLOSED CELL BACKER ROD TO BE INSTALLED IN COLUMN KEYWAY PER OLDCASTLE INSTALLATION MANUAL.

US PATENT NO. 8, 118,925.

Oldcastle Precast®

THIS DOCUMENT IS THE PROPERTY OF OLDCASTLE PRECAST, INC. IT IS CONFIDENTIAL, SUBMITTED FOR REFERENCE PURPOSES ONLY, AND SHALL NOT BE USED IN ANY WAY INJURIOUS TO THE INTERESTS OF, OR WITHOUT THE WRITTEN PERMISSION OF OLDCASTLE PRECAST, INC.
COPYRIGHT ©2014 OLDCASTLE PRECAST, INC ALL RIGHTS RESERVED

GENERATION PLANT
LAYOUT
FIRE WALL
WINNETKA, IL 60093

CUSTOMER
VILLAGE OF WINNETKA

DATE	SALES	DRAWN	ENGINEER	CHECKED	SALES ORDER
2/11/2014		JS	JS		

DRAWING NUMBER	REVISION	SHEET
Village of Winnetka-Generation Plant-79420-Submittal.idw	DATE	1 OF 3

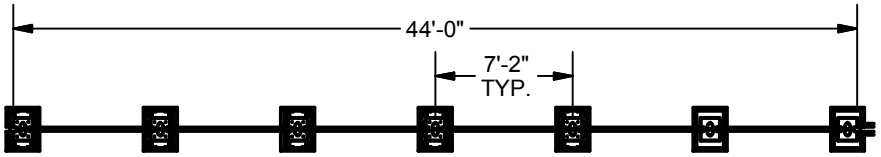

PLAN VIEW- WALL B

NOT TO SCALE

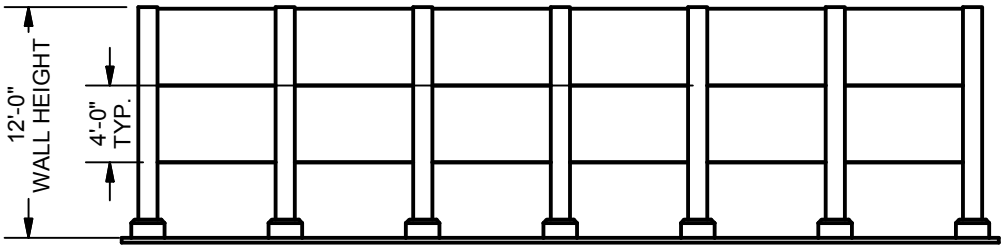

ELEVATION VIEW - WALL B

NOT TO SCALE

DESIGN NOTES

STRUCTURAL NOTES

1. WIND (PER ASCE7-05)
   a. BASIC WIND SPEED = 90 MPH
   b. EXPOSURE CATEGORY = C
2. SEISMIC (PER ASCE7-05)
   a. Ss = 0.127 g
   b. S1 = 0.059 g
   c. SITE CLASS =D
   d. LONG PERIOD TRANSITION PERIOD = 12 sec
3. GENERAL (PER ASCE7-05)
   a. OCCUPANCY CATEGORY = III

MATERIAL NOTES

1. REFRACTORY CONCRETE
   a. 28-DAY COMPRESSIVE STRENGTH = 6,500 PSI
   b. MODULUS OF RUPTURE = 950 PSI
   c. CONCRETE UNIT WEIGHT = 135 PCF
   d. PANELS TO INCLUDE STAINLESS STEEL FIBERS
   e. REFRACTORY MATERIAL MEETS 4-HOUR FIRE RATING
2. MAIN REINFORCING
   a. ASTM A-615
   b. 80 KSI YIELD STRENGTH
3. STIRRUP REINFORCING
   a. ASTM A-615 GR 60
4. BASE PLATE
   a. ASTM A-572 GR 50
   b. GALVANIZED PER ASTM A-123
5. ANCHOR BOLTS/NUTS/WASHER
   a. ASTM F-1554 GR.55
   b. GALVANIZED PER ASTM A-153
6. FOOTING REQUIREMENTS
   a. f'c = 4000 PSI
   b. REBAR PER ASTM A-615 GR 60

INSTALLATION NOTES

1. SITE ERECTOR TO ENSURE ALL OSHA REGULATIONS ARE FOLLOWED DURING INSTALLATION.
2. CLOSED CELL BACKER ROD TO BE INSTALLED IN COLUMN KEYWAY PER OLDCASTLE INSTALLATION MANUAL.

US PATENT NO. 8, 118,925.

Oldcastle Precast®

THIS DOCUMENT IS THE PROPERTY OF OLDCASTLE PRECAST, INC. IT IS CONFIDENTIAL, SUBMITTED FOR REFERENCE PURPOSES ONLY, AND SHALL NOT BE USED IN ANY WAY INJURIOUS TO THE INTERESTS OF, OR WITHOUT THE WRITTEN PERMISSION OF OLDCASTLE PRECAST, INC.
COPYRIGHT ©2014 OLDCASTLE PRECAST, INC ALL RIGHTS RESERVED

GENERATION PLANT
LAYOUT
FIRE WALL
WINNETKA, IL 60093

CUSTOMER
VILLAGE OF WINNETKA

DATE	SALES	DRAWN	ENGINEER	CHECKED	SALES ORDER
2/11/2014		JS	JS		

DRAWING NUMBER	REVISION	SHEET
Village of Winnetka-Generation Plant-79420-Submittal.idw	DATE	2 OF 3

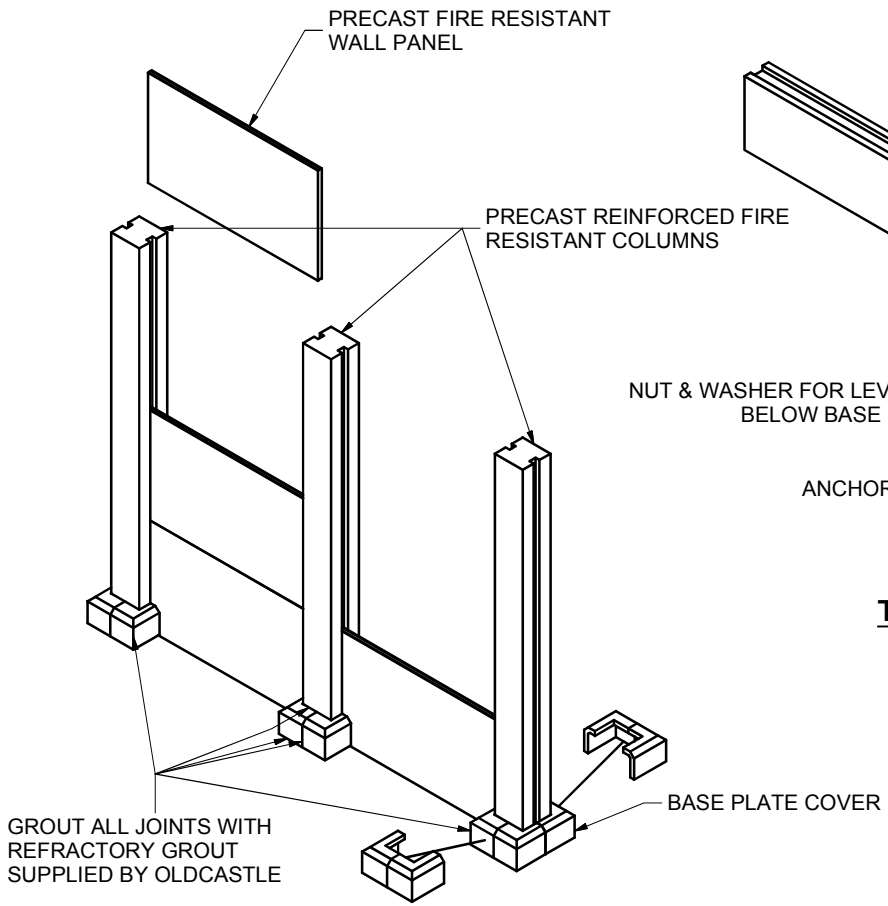

TYPICAL WALL ASSEMBLY

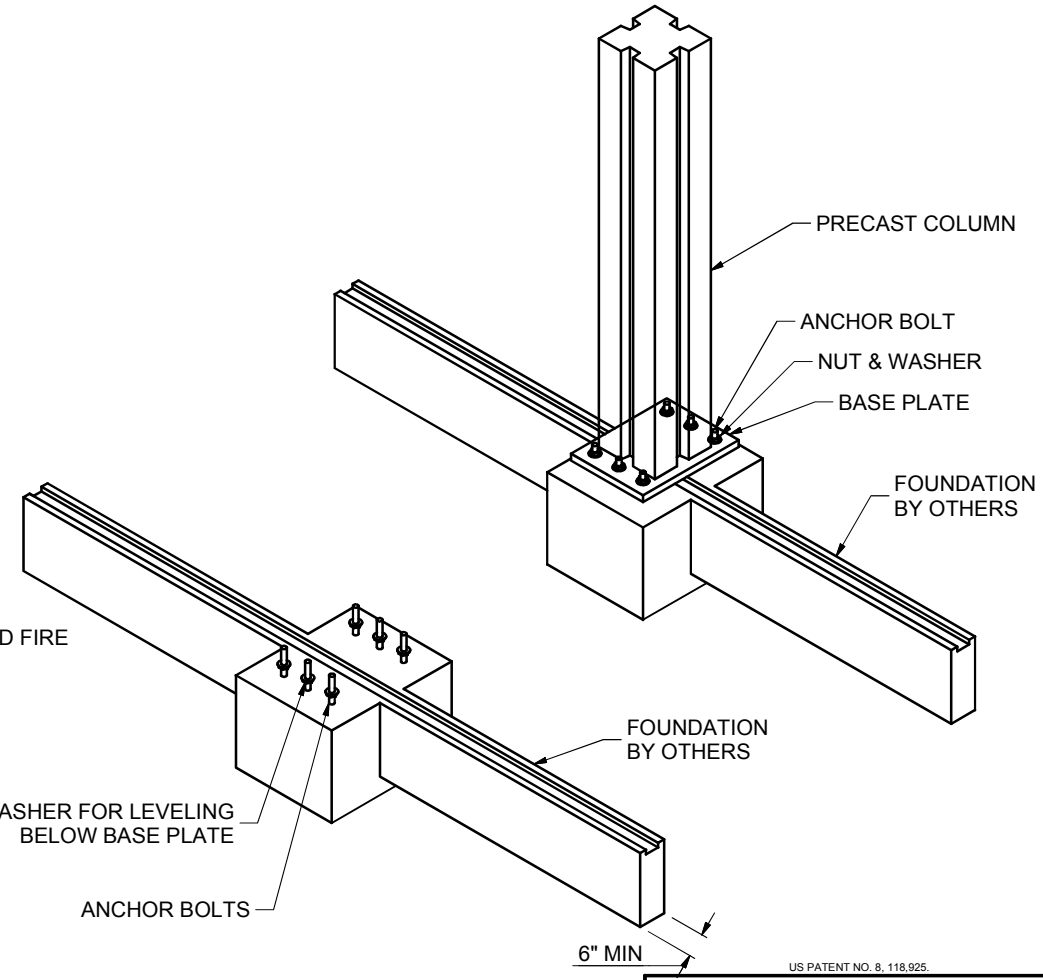

TYPICAL COLUMN ASSEMBLY

US PATENT NO. 8, 118,925.

Oldcastle Precast®

THIS DOCUMENT IS THE PROPERTY OF OLDCASTLE PRECAST, INC. IT IS CONFIDENTIAL, SUBMITTED FOR REFERENCE PURPOSES ONLY, AND SHALL NOT BE USED IN ANY WAY INJURIOUS TO THE INTERESTS OF, OR WITHOUT THE WRITTEN PERMISSION OF OLDCASTLE PRECAST, INC.
COPYRIGHT ©2014 OLDCASTLE PRECAST, INC ALL RIGHTS RESERVED

GENERATION PLANT
ASSEMBLY DETAILS
FIRE WALL
WINNETKA, IL 60093

CUSTOMER
VILLAGE OF WINNETKA

DATE	SALES	DRAWN	ENGINEER	CHECKED	SALES ORDER
2/11/2014		JS	JS		

DRAWING NUMBER	REVISION	SHEET
Village of Winnetka-Generation Plant-79420-Submittal.idw	DATE	3 OF 3

TruFireWall Installation Manual

This Installation Manual is intended to assist in the preparation and installation of TruFire Wall products manufactured by Oldcastle Precast Inc. The TruFire Wall technology and design are proprietary to Oldcastle Precast and this installation manual should not be used for any other products.

Your project will have a layout and plans supplied by Oldcastle Precast which shall be referred to while using this Installation Manual. Any questions regarding installation of this product should be directed to a TruFire Wall technical support member at 450-444-5181.

Contents

Foundation Work

Excavation	2
Form Setup	2
Anchor Bolt Setting	2
Cast in Place Concrete	2
Replacement and Compaction of Soil	2
Final Preparation for Columns and Panels	2

Delivery Setup

Scheduling	3
Crane and Personnel Lift Requirements	3
Site Assistance	4

Setting and Handling of Components

Offloading and Storage	4
Setting Columns	5
Leveling and Torqueing Anchor Bolts	6
Setting Panels	6
Grouting of Base Plates	8

Finish Details

Setting Column Base Plate Caps	8
Grouting of Base Plate Caps and Panel Slots	8
Installation of Column Tension Cable	8
Site Wrap-up and Pallet Return	9

Copyright© Oldcastle Precast Inc.

Foundation Work

Excavation

The customer is responsible for excavation of the TruFire Wall foundation and disposal of all excavated material.

The foundation (engineering and drawings provided by others) will support the weight of the TruFire Wall and any loads from wind or seismic activity. Therefore it is critical the footing be constructed on well compacted solid ground, and the excavation does not disturb the soil under the foundation.

The project plans will give the size and depth of footing. Ensure your excavation is at least 6" wider and deeper to allow placement of the foundation. The bottom of the excavation shall be prepared by placing and compacting at least 6" of clean crushed granular ¾" rock. Level the rock to within ¼" of the final grade.

Form Setup

Formwork shall be constructed to match the foundation as per project plans. Care shall be taken to ensure that reinforcing matches the plan details with proper clearances to all faces of the concrete.

The piers shall contain the supplemental reinforcement around the anchors bolts as shown on the plans.

Anchor Bolt Setting

Anchor Bolts shall be of the size and grade shown on the plans. It is critical that the bolts shall be plumb, at the proper spacing and projection, and protected during casting to prevent fouling of the bolt threads. A template shall be used to ensure the bolts meet these requirements. Templates, and Anchor Bolts, can be supplied by Oldcastle, upon request, to help ensure your project is successful.

Cast in Place Concrete

Concrete for the foundation shall meet or exceed the strength and properties called out in the project plans. Placement of the concrete shall be continuous, with consolidation required to ensure no voids exist. The bolt spacing from column to column shall be checked after placement of concrete to ensure they have not moved.

Replacement and Compaction of Soil

Once the forms have been removed, and the concrete has cured to adequate strength, the soil can be backfilled over the foundation. The backfill materials and compaction shall meet the requirements of the specifications. The foundation shall be backfilled to the grade as shown on the plans.

Final Preparation for TruFireWall Columns and Panels

Remove the anchor bolt templates and double check the bolt spacing between bolts, and from column to column. Place the column leveling nuts to the proper elevation for setting the columns. Clean the panel groove between the columns to accept the panels.

Ensure you have the proper grout on hand for grouting underneath the column bases (6,000 psi high-strength, non-shrink grout, provided by customer) and sealing the column base plate covers (refractory grout, provided by Oldcastle Precast) after they are set in place.

Delivery Setup

Scheduling

Oldcastle shall be notified at least 10 working days in advance of the required delivery date. Contact Oldcastle Precast at 450-444-5181 to schedule the delivery.

Crane and Personnel Lift Requirements

The site conditions and access points will determine the placement of the Crane, Personnel Lift and Truck egress to allow the TruFire Wall to be installed. A typical TruFire Wall will fit all of the components on one truck. Larger walls will require additional trucks.

The product weights are shown on the plans. The crane used shall be capable of lifting the product weights at the radius required to pick them off the truck and set them in place on the foundation.

A Personnel Lift will be required to disconnect the lift gear, and guide the panels into place at the top of the columns.

Site Assistance

The sales representative, or an Oldcastle Technician, will be available, as requested, to oversee the installation of the TruFire Wall product.

Setting and Handling of Components

Offloading and Storage

Panels will be supplied in a rack, which shall be offloaded with a fork loader. Weight of the pallet with panels is available on request. Pallets shall be placed on level ground and remain in the rack with banding in place until ready for setting. Do not move pallets once banding has been removed. Panels should always be stored and handled in the vertical position. Never lay the panels flat or place weight on top of them.

Columns should be off loaded and set on the ground, then tilted up and set directly on the foundation. Use the top lift point and the anchor bolt holes in the base plate when offloading columns from the truck. This will require cables of adequate length, or a spreader bar that is as long as the column. You can also use slings placed at ¼ the length from each end to handle the column. A tag-line shall be used to guide and stabilize the columns while suspended.

Use dunnage under the column, placed at ¼ the length from each end, to protect the column during storage.

Base Plate Caps will be supplied on a pallet and can be offloaded then stored on level ground using the fork loader. Depending on the specific job, Base Plate Caps will come in two pieces (as shown) or four pieces.

Setting Columns

Raise the columns from the storage location using the lift device at the top of the column. Use the rope to guide and stabilize the columns while suspended.

Place the column on the anchor bolts and use the nuts and washers to secure them. Check the columns for plumb in both directions and adjust the leveling nuts to plumb the column. Check the center to center spacing of the columns at the bases, and the tops to ensure the columns are plumb, and adjust as necessary. Do not apply grout underneath column bases until panel installation is complete.

Leveling and Torqueing Anchor Bolts

When the column is in its proper location, torque the anchor bolts to 100-150 Ft. Lbs to secure the column.

Setting Panels

The ABACO Model NGL 75, or ALG 75, shall be used for handling panels. In addition, 2 slings shall be used for added safety (see photos next page). The ABACO lifter is rated for 2,640 Lbs. maximum lift, and a panel thickness from ¾" to 3". Standard panels are 2" thick. The clamp works by friction and should not be used when the panels are wet. The panel and jaw surfaces should be clean, free of loose debris, and free of any oil or water on the surface.

The lifter shall be placed on the centerline of the panel to ensure level picking. Pressing the red button on the clamp will release the clamp jaws and will automatically grip the panel when lifted. The clamp jaws automatically open when all lifting pressure is relieved, therefore, once lifted, do not let the panel rest on the ground, or an obstruction, or the clamp jaws may inadvertently open. To release the clamp, the operator must relieve lifting pressure on the panel, allowing the clamp jaws to open automatically.
For added safety, Oldcastle recommends the use of slings when placing panels. Lift the panel with the panel clamp, place blocks under the panel and release the clamp. Place slings around the panel at the ends, and lift the panel with the slings. Once the panel is in the final location, place blocks under the panel, remove the slings, and use the panel clamp to raise the panel, remove blocks and lower panel into its final location.

The first panel set will have notches at the bottom to clear the column base plates. Set this panel into the column slots and slide it until it engages into the foundation panel slot. The panel must rest in the slot, and not on the column bases. Do not pry on the panels to force them into place. Continue setting panels according to the order shown on the plans. There should never be a gap between the panels. Alternate the removal of the panels from the rack to help keep the pallet balanced.

Grouting of Base Plates

Once the column bolts are torqued down, and the wall panel installation is complete, the space under the steel base plate must be fully grouted. Use non-shrink 6,000 PSI grout, supplied by others, to pack the space under the column with grout. Grout must be mixed per the manufacturer's information and protected from freezing for the first 7 days.

Finish Details

Setting Column Base Plate Caps

Set the caps in the proper position to cover the column base plates. Slide the caps into place to minimize the gaps around the column.

Grouting of Base Plate Caps and Panel Slots

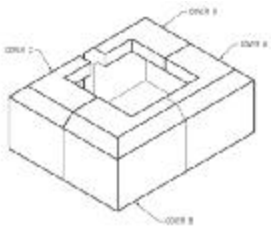

The Base Plate Caps are designed to thermally protect the steel base plates and anchor bolts of the column. The Caps and Panel Slots must be sealed in place using Refractory Grout, as supplied by Oldcastle Precast, to prevent ingress of moisture and oil. Grout should be sloped to shed water away from the columns and panels. Mix only a small amount of grout at one time to ensure you have time before the grout sets. Grout must be mixed per the manufacturer's information and protected from freezing for the first 7 days.

Installation of Column Tension Cable

If the specific project requires, columns are connected by a wire rope tension cable at the top of the columns. The Tension Cable assembly (shipped completely assembled with wire rope sections, shackles, and turnbuckle) is connected with a shackle to the existing lifter embedded at the top of the end columns. After the assembly is installed, tighten the turnbuckle to give 4" sag maximum in the system and to secure the tops of the columns.

Installation of Backer Rod Support

The backer rod, which is installed in the column slots between the panel and column, is used to stiffen the system from potential vibration in the panels due to wind loading. The backer rod is installed on the top four feet of the wall only. Cut 1-¼" diameter closed cell backer rod into 4' lengths; one section of backer rod per column is sufficient. To install, place the rod on the formed side of the wall (smooth side) and begin to slide in the gap between the panel and column.

A blunt tool may be used to press the rod fully into the slot, being mindful not to puncture the backer rod. Once the rod has been pressed into the column slot fully, a thin line of construction adhesive is to be placed on either side of the rod as shown below.

Site Wrap-up and Pallet Return

The pallets, racks and dunnage used for the transportation of the products can be returned and reused. Depending on site location, shipping costs may not make this feasible, and the pallets and racks can be recycled or trashed. Contact a representative to determine which is most feasible.

The ABACO panel clamp shall remain with the owner to allow disassembly of the TruFire Wall in the future.

Steel Tank Institute

AquaSweep™

Gravity Oil Water Separator

UL 2215 Listed

Who Needs an Oil Water Separator?

Virtually any industrial user who controls or collects storm water and discharges it through a pipe, drain or other outlet, into a storm sewer system or navigable waterway must comply with the National Pollutant Discharge Elimination System (NPDES). Mandated by Congress under Section 402 of the Clean Water Act, the NPDES storm water program is a two-phased approach to eliminating or reducing accidental and chronic low-level releases of oil-polluted water. A working oil water separator is an important part of a storm water drainage system designed for facility compliance with the NPDES storm water program.

NPDES Phase I and Phase II requires permits for storm water discharges associated with industrial activity, including construction sites. Whether a new installation or existing facility, many public and private facilities are affected. Those most likely to have oily storm water discharge include:

- *Petroleum marketing - specifically service stations and convenience stores*
- *Bulk oil terminals and loading racks*
- *Automobile/truck/fleet repair and maintenance shops*
- *Airports, bus terminals and railroad yards*
- *Parking lots at shopping areas or municipal centers*
- *Refineries and petrochemical plants*
- *Utilities*
- *Material handling facilities*

To meet water runoff compliance regulations, the storm water drainage systems must be capable of removing the petroleum hydrocarbons from the natural water runoff down to at least 15 parts per million (ppm), or even lower in some jurisdictions. This requires the removal of all free oil droplets equal to or greater than 20 microns in size. EPA has picked the "oil sheen" test as a determining factor in establishing if storm water discharges are "contained" and therefore, need a permit.

Helps you meet EPA Phase II Storm Water Program discharge limits

How does the AquaSweep™ Oil Water Separator Work?

AquaSweep™ Gravity Oil Water Separators are designed for gravity-induced separation of oil from water. This system is passive, meaning that the attributes of the incoming oily water will directly determine the characteristics of treated outgoing water. The separators are designed for gravity removal of non-emulsified hydrocarbons, i.e., motor oils, lightweight oils, and related petroleum products with a specific gravity of less than 1.0. Depending upon the AquaSweep™ model, the contaminated oily water follows a path through various pre-selected coalescer materials. The AquaSweep™ Gravity Oil Water Separator construction slows the flow and turbulence of the incoming water. The interplay of this motion, coupled with buoyant forces and contact with the coalescer material(s) cause droplets of oil to rise and combine into larger oil globules. The globules rise to the surface and float on top of the water. Sludge and other matter settle and accumulate at the bottom of the tank compartment. The resultant storm water, having been cleaned of these contaminants, exits the separator, below the oil level for further treatment or is directed back into the environment. Accumulation of oil and sludge within the separator are contained until they can be removed and disposed of properly.

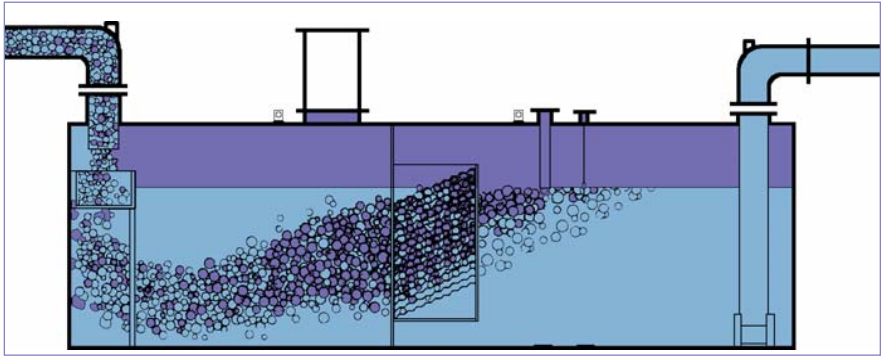

What makes AquaSweep™ different from other oil water separators

- UL 2215 Listed and STI Engineered and Labeled
- Available in a range of capacities, flow rates and effluent discharge efficiency levels rated as low as 5 ppm
- Optional double-wall designs offer integral secondary containment
- Level sensors and safeguard controls available
- Corrosion protected tank built to nationally recognized STI standards with strict third-party quality control inspection program
- Various coalescer materials are available that meet UL requirements

AquaSweep™ Oil Water Separator Operation and Maintenance

The STI **AquaSweep™** Gravity Oil Water Separator has no moving or mechanical parts. Liquid level sensors and control boxes, which are required for UL 2215 listing, sense the oil level within the tank, and alert the operator when the oil needs to be pumped out. The separator will not function properly, and oil-contaminated water may flow out if accumulated oil depth within the separator is allowed to exceed maximum capacity. Sludge buildup in front of the primary coalescer also needs to be removed periodically. Both the primary and secondary coalescer (if provided) can be removed or cleaned in place with a standard water hose.

Complete, detailed installation, start-up, operating and maintenance instructions are provided with each separator system.

AquaSweep™ Oil Water Separator Specifications

- Qualified and tested per Underwriters Laboratory UL 2215
- Meets ULC-S656 standards for oil water separators
- Used to process storm water and wastewater runoff for compliance with US EPA Clean Water Act criteria
- Available with tank capacities from 300 to 50,000 gallons (1,100 to 190,000 liters)
- Handles flow rates from 45 to 10,000 gallons per minute (170 to 37,800 liters per minute)
- Rated effluent efficiency of less than 10 ppm on most models, and less than 5 ppm on select models
- Optional double-wall and jacketed designs offer integral secondary containment which can be tested for tightness or continuously monitored for leaks
- Primary storage tank and secondary containment compatible with a wide range of oils
- Corrosion protection of exterior tank constructed to nationally-recognized UL and STI standards with strict third-party quality control inspection program
- Customized manways can be provided for cost effective maintenance access
- Liquid level sensors and control panels available to sense the oil level within the tank, and alert the operator when the oil needs to be removed
- Several models available in compliance with STI specifications
- Available from a large network of STI licensed manufacturers

AquaSweep™ Installation at Chicago's O'Hare International Airport

Disclaimer

AquaSweep™ Gravity Oil Water Separators are designed to give you years of effective service. Observing some basic precautions will allow for maximum performance.

1. Never intentionally drain vehicle crankcase waste oil into the separator because some of the oil's components may dissolve in the water and pass through the separator. Waste oil should be deposited into an appropriate tank for proper disposal.
2. Maximum design separation is achieved when influent liquid temperatures are between 40° F (4°C) and 140° F (60°C), the ambient air temperatures between 0° F (-18°C) and 100° F (38°C), and the specific gravity of the oil to be separated is between 0.70 to 0.95. The maximum oil concentration is 200,000 mg/l (20%) at the maximum flow rates specified by the manufacturer. The design of the separator requires that the fluid inside always be kept above 32° F.
3. The unit is designed to remove free oils that are gravity fed into the unit only. Refer to Operating and Design Guidelines for additional design criteria.
4. The performance of the unit will be decreased if maximum flows are exceeded, inlet oil concentration is greater than 20% or if the specific gravity of the oil is greater than 0.95.
5. The gravity separator will not remove chemical emulsions or dissolved hydrocarbons and their presence impedes oil recovery. Do not direct detergents, solvents, or highly dissolved solids concentrations (such as untreated sanitary sewage) into the separator. These elements have emulsifying tendencies.
6. Do not use soaps, solvents or detergents when cleaning the separator.
7. The oil water separator must be filled with water to the design operating level at all times.
8. Equipment supplied by others that are attached to the AquaSweep™ (for example, automatic pump out systems, control packages, skimmer pumps and make-up water systems) may adversely affect the operation of the unit. The manufacturer is not responsible for problems caused by these systems which degrade separator performance.

Steel Tank Institute®

570 Oakwood Road
Lake Zurich, IL 60047
Ph 847/438-8265
Fx 847/438-8766
www.steeltank.com

Steel Tank Institute **AquaSweep™**

Gravity Oil Water Separator

4/03-1M-Item #050-50-0002

MAINTENANCE INSTRUCTIONS FOR AQUASWEEP™ OIL WATER SEPARATORS

Reduced performance and damage to the coalescer panels, secondary coalescer, and other components may occur if the unit is not properly maintained. A maintenance plan for AquaSweep™ gravity oil water separator should include:

- Periodic inspection to check for and remove the oil, sludge, sand, and other sediments in the tanks' compartments.
- Periodic inspection and replacement of coalescing media.
- Check for free oil in the effluent after heavy rainfalls to verify effective separator and alarm operation.
- Periodic monitoring of the effluent for free oil. Check for oil in the effluent.

Care must be taken when entering the AquaSweep™ Oil Water Separator. Surfaces will be slippery and flammable and combustible vapors may be present. Follow all local codes and OSHA guidelines concerning entry into confined spaces.

Required maintenance procedures for each compartment includes,but is not limited to, the following:

1.0 Upstream interceptor (if present): Frequently examine for and remove heavy debris common in storm water run-off. Remove any material, such as paper, vegetation, etc., that would obstruct the separator's inlet piping or impede the separator's performance.

2.0 Sediment Chamber: Periodically measure the sediment depth on the tank bottom with a wooden gauge stick. Pump out sludge when it is necessary. It may be required to remove the inlet pipe(s) and/or primary coalescer to be able to pump out the sediment chamber. The chamber should be inspected and cleaned once a year, or more often as needed, as follows:

- 2.0.1 Shut off the inlet and outlet valves and pump out all fluid from the separator. Dispose the fluid in accordance with all Federal, State, and Local codes.
- 2.0.2 Using a high pressure water spray or steam cleaner, wash down inner tank walls and pump out the slurry.
- 2.0.3 Inspect the interior tank coating (if applicable) for damage and repair as necessary.

3.0 Primary Coalescer Containment: At least annually, in conjunction with servicing the sediment chamber, replace or clear the inlet pipes and coalescer plates or packs of oil/grease accumulations with a suction hose or portable oil pump and pressure spray or steam clean the plates and packs as necessary. Do not use soaps or detergents to clean the plates or packs since this will introduce emulsifiers to the unit. Clean the coalescer compartment as needed to prevent an accumulation of sediment that would impede oil water separation.
Inspect the interior tank coating (if applicable) for damage and repair as necessary. Inspect components for damage and replace if necessary.

4.0 Secondary Coalescer Containment (Models 3 and 5, only): After heavy rainfall or whenever it is likely that inlet fluids will bring increased amounts of sediment into the separator or at least annually, replace or clean the secondary coalescer.

- 4.0.1 Remove the secondary coaleseer from the tank through the access manway.
- 4.0.2 Using water only, pressure spray or steam clean the secondary coalesce upstream of the oil water separator's inlet as necessary. Do not use soaps or detergents to clean the plates since this will introduce emulsifiers to the unit.
- 4.0.3 Inspect the secondary coalescer for damage and replace if necessary.
- 4.0.4 Re-install the clean or new elements into the secondary coalescer housing.

5.0 Auxiliary Equipment: Periodically, check any and all auxiliary equipment, such as level alarms, floats, pumps for damage and proper operation. Repair or replace damaged equipment prior to returning the oil water separator to service.

5.0.1 After tank has been pumped out and refilled and the floats have been checked and serviced, ensure that there are no alarm conditions seen on the control panel and all controls have returned to the normal operating positions.

6.0 After all of the servicing has been performed on the tank, completely fill the separator with clean water. The unit is now ready to be returned to service by following the "Start-up Instructions".

7.0 Aboveground separator requirements:
The separator operator should perform periodic walk-around inspections to identify and repair areas of damage to the vessel or the coating itself and check for proper drainage around the separator area.

7.1 It is imperative that the separator exterior be inspected periodically to ensure that the integrity of the coating is maintained. The frequency of periodic repainting will be based upon environmental factors in the geographic area where the separator is located. Special consideration should be given to the selection of the paint, surface preparation and coating application. The coating selected should be suitable for use with the current coating, or the existing coating should be removed. The coating selected should be of industrial quality.

7.2 Proper site preparation and maintenance are vital to ensure drainage of surface water. Should ground conditions change or settlement occur, take the appropriate steps to maintain proper drainage and prevent standing water near or under the separator area.

7.2.1 For diked separators, remove any product spills immediately. Be sure to dispose of hazardous material properly.

7.2.2 For diked separators fitted with a drain, drain off water only. Drain openings are required to be maintained liquid tight.

Versatile and Proven Solutions for Secondary Containment Compliance

ci agent solutions®

GSA Advantage!™ Contract #GS07F0078T

ENVIRONMENTALLY FRIENDLY ci agent solutions® & RECYCLABLE PRODUCTS

C.I.Agent® Barrier Boom

To Grade Start

and Finished

Dike Method Start

and Finished

Wind Farm Pad Mount Start

Wind Farm Pad Mount Finish

C.I.AGENT® BARRIER BOOM DESCRIPTION:

C.I.Agent® Barrier Boom is a proven Secondary Containment System designed to allow the flow of water during normal rainfall or snow melt events, but becomes an impervious barrier to prevent hydrocarbon migration in the event of an oil release. Barrier Boom is constructed from non-woven geotextile materials filled with C.I.Agent Granules, a proprietary blend of USDA food-grade polymers, and backed with Agent-X, a non-woven geotextile material with C.I.Agent embedded within the fabric. C.I.Agent Barrier Boom has become the accepted solution for SPCC Secondary Containment by professional engineers across the nation.

C.I.AGENT® BARRIER BOOM APPLICATIONS:

C.I.Agent® Barrier Boom is the ideal solution for providing Secondary Containment as required by 40 CFR 112.7 (C) SPCC. C.I.Agent Barrier Boom has been installed and PE Certified more than 9,000 times over the past 12 years in substations for the electric utility industry and other applications around the world. Applications for Secondary Containment with C.I.Agent Barrier Boom also include Wind Farm pad-mounted transformers, oil-filled equipment storage areas, bulk fuel and oil storage areas — all without the use of concrete walls, sump pumps, and oil-water separator systems. C.I.Agent Barrier Booms can be used with clay and vinyl liner systems in non-impervious subsurface applications.

C.I.AGENT® BARRIER BOOM SPECIFICATIONS:

- Water Flow Rate: a minimum of 3 GPM per ft_2 of material with one foot of head pressure
- Hydrocarbon flow rate: 0 GPM (100% containment)
- Solidifies approximately a half gallon of oil per ft_2 depending on type of oil, viscosity, and temperature
- Service life of installed product: Life of equipment it protects
- UV resistance of 70% (typically covered with clean stone)
- Oxidation resistance of 80%
- Contains 12 to 16 oz. of loose C.I.Agent polymers per ft_2

C.I.AGENT® BARRIER BOOM BENEFITS:

- Meets EPA SPCC requirements 40CFR112.7, U.S.D.A. Bulletin 1724E-302, Chapter 3-3.2.2 and 3.2.3, and IEEE Std. 980
- Barrier Boom is custom designed to meet your site's needs
- Ease of installation: typically completed in one day
- No special tools required
- Your equipment remains fully energized
- Little or no maintenance required
- Eliminates the need for concrete walls, sump pumps, oil-water separators, pits, manual valves, and hydrocarbon detectors
- Reduces containment cost by 50% to 80% (on average) over alternative methods

11760 Commonwealth Dr. • Louisville, KY 40299 office 502.267.0101 toll free 866.242.4368 fax 502.267.0181 web www.ciagent.com & ciagent-stormwater.com Rev. 7/12

Versatile and Proven Solutions for Secondary Containment Compliance

ci agent solutions®

"We were impressed with the product because it is a relatively low-cost alternative to other products. C.I.Agent was estimated to provide a 50-75% cost savings over equivalent solid concrete containment. We have been very pleased with the product and the supplier."
Jude Beyerle, Group Leader, Substation Engineering, E. On U.S.

Dike installation for oil and rainfall requirements.

Pad mount for smaller containment.

Water gate install to process water.

The inside wall of the C.I.Agent® Barrier Boom is a basic geotextile made from a patented blend of recycled synthetic materials that is both hydrophobic and oleophilic. The material wicks the oil throughout its fibers and has a tremendous load capability per square inch.

C.I.Agent is a non-toxic, non-hazardous, and environmentally friendly blend of cross-linking polymers that encapsulates transformer oils into a cohesive rubber-like mass on contact.

Agent-X makes up the outer wall of the C.I.Agent Barrier Boom. It is made of two layers of a geotextile with C.I.Agent polymers laminated between the layers. The material itself has a tremendous filtering effect and keeps oil from passing through this unique final outside wall.

A unique quilting pattern (not shown) keeps the C.I.Agent polymers from shifting during handling and installation.

C.I.AGENT® BARRIER BOOM AVAILABILITY:

C.I.Agent Barrier Boom is manufactured to the specific requirements of the containment site. In most cases the C.I.Agent Barrier Boom can be delivered within two to four weeks from date of the order.

ENVIRONMENTAL INSURANCE POLICY

C.I.Agent Solutions carries a $2 Million Product Liability and $2 Million Environmental Insurance policy on C.I.Agent Barrier Boom.

For additional information call C.I.Agent® Solutions.

11760 Commonwealth Dr. • Louisville, KY 40299 office 502.267.0101 toll free 866.242.4368 fax 502.267.0181 web www.ciagent.com & ciagent-stormwater.com Rev. 7/12

Versatile and Proven Secondary Containment Solutions

ci agent solutions®

GSA Advantage!®
Contract #GS07F0078T

ENVIRONMENTALLY FRIENDLY & RECYCLABLE PRODUCTS

C.I.Agent® Polyvinyl and Barrier Boom Containment System

Laying out the polyvinyl sections.

Polyvinyl pit containment.

Wind farm - staking the C.I.Agent® Barrier Boom before applying stone for a 'to grade' finish.

Pre-fabricated corners.

PRODUCT DESCRIPTION:

The C.I.Agent® Polyvinyl and Barrier Boom Containment Systems for hydrocarbon filtration in sandy or undetermined subsoils, allows storm water to flow through the C.I.Agent Barrier Boom side walls while removing hydrocarbons. In the event of a large spill, the side walls completely solidify and contain the hydrocarbon, keeping it from escaping. The C.I.Agent Polyvinyl and Barrier Boom Containment System meets requirements SPCC 40CFR112.7, U.S.D.A. Bulletin 1724E-302, Chapter 3-3.2.2 and 3.2.3, and IEEE Std. 980.

PRODUCT APPLICATIONS:

The C.I.Agent® Polyvinyl Blankets install quickly and are perfect for secondary containment of substations, tank farming, and wind farms. It is recommend to have two to three inches of pea gravel over excavated area prior to vinyl application.

PERFORMANCE SPECIFICATIONS:

- The base of the system is made of 22 oz. or 40 oz. polyvinyl with pre-formed corners. The side walls are made with C.I.Agent® Barrier Booms. The booms are constructed from non-woven geo-textile material filled with C.I.Agent® Granules, a proprietary blend of USDA food-grade polymers that encapsulate hydrocarbons
- Water flow rate: Minimum 3 GPM per square foot of material with one foot head pressure
- Hydrocarbon flow rate: 0 GPM (100%+ containment)
- Service life of installed product: Life of the equipment it protects

BENEFITS:

- A bury and forget application
- Cost-effective solution for Secondary Spill Containment
- Custom made for site specific application
- C.I.Agent Polyvinyl and Barrier Boom Containment Systems can be installed in one or two days (depending on size of install)
- The C.I.Agent Polyvinyl and Barrier Boom Containment Systems are made in the U.S.A., pre-fabricated at the factory, and assembled on site
- C.I.Agent Polyvinyl and Barrier Boom Containment Systems will not drip or leach out
- The C.I.Agent Polyvinyl and Barrier Boom Containment System comes complete with granular Bentonite, vinyl adhesive, vinyl cleaner, metal strips, wooden stakes, Reef tape, box of screws, Tap Cons, and roller.

AVAILABILITY:

Allow 4-5 weeks for delivery.

C.I.Agent® Polyvinyl and Barrier Boom Containment Systems carry a $4 Million Product and Environmental Insurance Policy when installed according to manufacturer's specifications and documented with photographs.

11760 Commonwealth Dr. • Louisville, KY 40299 **office** 502.267.0101 **toll free** 866.242.4368 **fax** 502.267.0181 **web** www.ciagent.com & www.ciagent-stormwater.com 7/12

Versatile and Proven Secondary Containment Solutions

ci agent solutions®

SIMPLE • COST EFFECTIVE SOLUTIONS

Description – C.I.Agent® 22 oz. or 40 oz. Polyvinyl and Barrier Boom Containment System
The C.I.Agent Polyvinyl and Barrier Boom Containment System ships in sections, each marked to correspond to a site map, for easy assembly in the field. It comes with pre-formed corners for height consistency and the C.I.Agent Barrier Boom walls are pre-bonded to the Polyvinyl Liner. Shipment includes the Polyvinyl Blanket, granular Bentonite® (for sealing around equipment pads, cables and conduits), polyvinyl adhesive, adhesive cleaner, roller, metal strips, wooden stakes, a roll of Reef tape, and a box of screws and Tap Cons. Quantities of supplies depend on the size of the installation.

Information needed for a quote includes:
1. Drawing of the site and/or application with dimensions
2. The volume of oil being contained
3. The dimensions of the equipment pad; length and width
4. The direction of flow
5. If applicable, the depth of rock

TOP VIEW: Typical Example

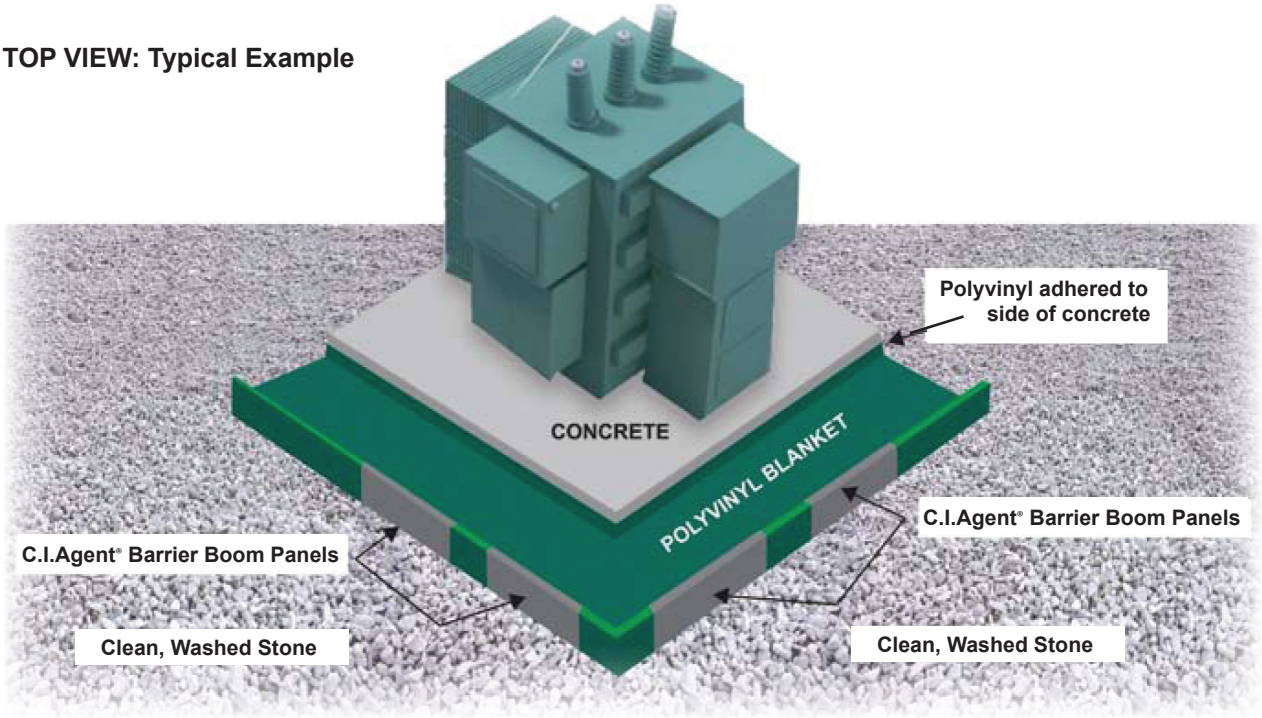

SIDE VIEW: Typical Example

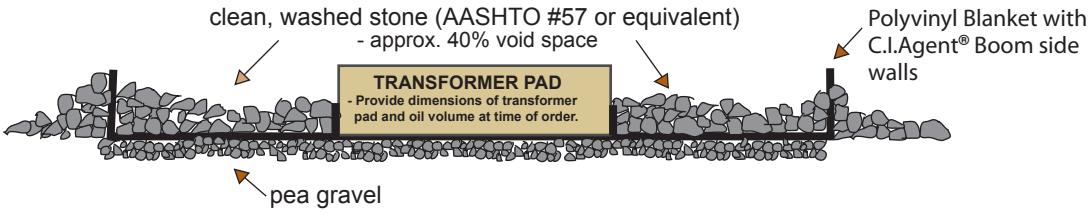

Versatile and Proven Oil Spill Clean Up Solutions

ci agent solutions®

GSA Advantage!™ Contract #GS07F0078T

C.I.Agent® Hydrocarbon Solidifying Polymers

C.I.Agent® is available in bulk or Dissolvable Film Packets. It is also used in our Marine and Sheen Booms, pads, pillows and filtration media.

C.I.Agent®, used on an oil spill on the Ohio River, proved to be more efficient and less expensive than traditional methods.

C.I.Agent® used for shoreline clean up in Henderson, Ky.

C.I.Agent® was used in the world's longest oily water separator on Dauphin Island, Ala. during the Deepwater Horizon Oil Spill.

C.I.AGENT® DESCRIPTION:

C.I.Agent® is a proprietary blend of USDA food-grade polymers that is non-toxic, non-corrosive, non-carcinogenic, and non-hazardous. C.I.Agent is listed on the EPA National Contingency Plan Product Schedule as a "Solidifier" for use on oil spills in the navigable waters of the United States.* C.I.Agent polymers have a long chain molecular structure that is highly cross-linking with organic liquid hydrocarbons, enabling C.I.Agent to solidify and suppress harmful vapors of sheen, gasoline, diesel, and oils, including crudes, upon contact. The by-product is an inert, solid, rubber-like mass that floats in both fresh and salt water. Being environmentally responsible, C.I.Agent has been tested non-harmful to aquatic life and waterfowl. The solidified by-product is 100 percent recyclable as raw material for asphalt, rubber and plastic production, or can be burned as fuel.

C.I.AGENT® APPLICATIONS:

C.I.Agent® can be used in loose granule form, dissolvable film packs, pillows, booms, and hydrocarbon flow filters. C.I.Agent can be effectively used for both spill prevention and clean up. As a spill prevention tool, C.I.Agent has become the engineered solution for the electric utility industry for SPCC Secondary Containment and for oil contamination removal in underground vaults and manholes. C.I.Agent® Hydrocarbon Flow Filters, storm drain inserts, and sheen bags can remove hydrocarbons from water to levels below 5ppm without impeding the flow of water.

C.I.AGENT® PERFORMANCE SPECIFICATIONS:

- Solidification rate by weight: 4 parts contaminant to 1 part C.I.Agent®
- Solidification speed depends on the type and viscosity of the hydrocarbon
- C.I.Agent® is effective in temperatures ranging from -30°F to +130°F

C.I.AGENT® BENEFITS:

- Solidifies all organic hydrocarbons
- Works equally well in fresh and salt water
- Can be used in extreme hot or cold conditions; has indefinite shelf life
- No expensive mechanical equipment required for recovery
- Does not sink
- Renders hydrocarbons into a non-hazardous inert ,solid, rubber-like mass
- Suppresses harmful hydrocarbon vapors
- Can be disposed of in most landfills, eliminating the "Cradle to Grave" liability and fees associated with hazardous waste disposal**
- Can be 100% recycled as raw material for asphalt, rubber and plastic production, or can be burned as fuel

C.I.AGENT® AVAILABILITY:

C.I.Agent® is available in loose granule form and in dissolvable film packs in standard quantities packaged by weight: 10 lb., 50 lb., 100 lb., 200 lb., 400 lb., and 800 lb. units. Granules are available in 30 gal., 55 gal., and 95 gal. over packs. C.I.Agent® Dissolvable Film Packets are available in 4 oz., 8 oz., and 16 oz.

* DISCLAIMER: C.I.Agent®, also known as Cheap Insurance, is on the U.S. Environmental Protection Agency's NCP Product Schedule. This listing does not mean that the EPA approves, recommends, licenses, certifies or authorizes the use of C.I.Agent® on an oil discharge. This listing means only that data has been submitted to EPA as required by subpart J of the National Contingency Plan, 300.915.
**Always check with Local, State, and Federal Regulations prior to disposal.

11760 Commonwealth Dr. • Louisville, KY 40299 **office** 502.267.0101 **toll free** 866.242.4368 **fax** 502.267.0181 **web** www.ciagent.com **rev.** 11/12

Material Safety Data Sheet

Updated 2/1/2013

SECTION I: Manufacturer and Emergency Phone Information

Product Name: **Cheap Insurance/C.I.Agent®**

Manufacturer: C.I.Agent Solutions®, 11760 Commonwealth Drive, Louisville, KY 40299

Product Information: 800-255-6073 Emergency Information: 800-255-6073

SECTION II-A Ingredients Percent CAS

Trade Secret

SECTION II-B Acute Toxicity Data

Based on information available, components in this product are not hazardous under OSHA Hazard Communications, 29 CFR 1910.1200

SECTION III Health Information

The health effects noted below are consistent with requirements under the OSHA Hazard Communications Standard, 29 CFR 1910.1200

Eye Contact: Product may cause irritation to the eyes.

Skin Contact: Product may be minimally irritating to the skin.

Inhalation: Product may cause mild irritation to the nose and throat.

Ingestion: Product is generally considered to have a low order of acute oral toxicity.

Signs and Symptoms: Irritation as noted above.

Aggravated Medical Conditions: Preexisting eye, skin, and respiratory disorders may be aggravated by exposure to this product.

SECTION IV Occupational Exposure Limits

OSHA PEL/TWA	ACGIH TLV/TWA
15 mg / M3 as total dust 5 mg / M3 as respirable dust	10 mg / M3 as total dust

SECTION V Emergency and First Aid Procedures

Eye Contact: Flush Eyes with water for 15 minutes. If irritation occurs, get medical attention.

Skin Contact: If contact with molten product occurs, treat as normal burn.

Inhalation: Remove to fresh air.

Ingestion: Not ordinarily required.

SECTION VI Physical Data

Specific Gravity:	.94	Physical State:	Solid
Solubility in Water:	Negligible	Odor:	Odorless

SECTION VII Fire and Explosion Hazards

Flash point: N/A

Flammable Limits /% Volume in Air: N/A

Extinguishing Media: Water Fog, Foam, Dry Chemical, C02

Special Fire Fighting Procedures and Precautions: Material will not burn unless preheated. Do not enter confined fire space without full bunker gear (helmet with faceshield, bunker coats, gloves, and rubber boots), including a positive pressure NIOSH approved self contained breathing apparatus. Cool fire exposed containers with water.

SECTION VIII Reactivity

Stability: Stable

Conditions and Materials to Avoid:

Materials: Avoid contact with strong oxidizing agents.

Conditions: Product contains residual unsaturation, which can undergo exothermic oxidative degradation. Accumulation of product in areas exposed to elevated temperatures for extended periods in air may result in self-heating and autoignition. Guideline is five days at 200° F.

Hazardous Decomposition Products:

At processing temperatures, some degree of thermal degradation will occur, although highly dependent on temperature and environmental conditions, a variety of decomposition products may be present ranging from simple hydrocarbons (such as methane and propane) to toxic irritating gases (carbon monoxide/dioxide, acrolein, halogenated compounds, acids, ketones, aldehydes). See special precautions.

SECTION IX Employee Protection

Respiratory Protection: If exposure may or does exceed occupational exposure limits (section IV) use a NIOSH approved respirator to prevent overexposure. In accord with 29 CFR 1910.134, use either a supplied air respirator or an air purifying respirator for particulates.

Protective Clothing: Safety glasses and protective clothing should be worn when product is heated in processing.

Additional Protective Measures: Ventilation is required to control dust concentration in air. Adequate ventilation and/or engineering controls are required when product is heated in processing.

SECTION X Environmental Protection

Spill or Leak Procedures: Shovel and sweep up or use industrial vacuum cleaner. Avoid generating dust clouds. Put into containers for reclaiming or disposal.

SECTION XI Special Precautions

Practice good housekeeping. Do not allow product to accumulate in processing area. Reducing the velocity of transport will reduce static charging. Static charge buildup can be a potential fire hazard when used in presence of volatile or flammable mixtures.
In processing, do not allow the temperature to exceed 450° F. Maintain a fire watch if 450° F is exceeded.

Avoid vapors from heated products. Adequate ventilation and/or engineering controls must be employed in high temperature processing. to prevent exposure to potentially toxic/irritating fumes.

SECTION XII Transportation Requirements

DOT Classification: Not hazardous by DOT Regulations

SECTION XIII Other Regulatory Controls

According to EPA a manufacture must list if any of its ingredients are on the SARA Title III Section 313. C.I.Agent® components are listed on the EPA/TSCA Inventory of chemical substations. Protection of stratospheric ozone (pursuant to Section 611 of the clean air act amendments of 1990.) Per 40 CFR 82, this product does not contain nor was it directly manufactured with any class I or class II ozone depleting substances. In accordance with SARA Title III, Section 313, and based on available data to IRST LLC, this product is not regulated by SARA, Title III.

SECTION XIV State Regulatory Information

Based on available information, this product does not contain and chemical substance regulated by a specific state list.

SECTION XV Special Notes

The Information contained herein is based on data available to C.I.Agent Solutions® and is believed to be correct. However, C.I.Agent Solutions® makes no warranty, expressed or implied regarding the accuracy of these data or the results to be obtained from the use thereof. C.I.Agent Solutions® assumes no responsibility for injury from the use of the product described herein.

BE SAFE --- READ OUR PRODUCT SAFETY INFORMATION AND PASS IT ON. PRODUCT LIABILITY LAWS REQUIRE IT.

INSTALLATION INSTRUCTIONS

C.I.Agent® Barrier Boom

For SPCC Compliance to EPA Reg. 40 CFR 112 for Secondary Containment

C.I.Agent Solutions • 11760 Commonwealth Dr. • Louisville, KY 40299 • 866-242-4368 • 502-267-0101 • Fax 502-267-0181 • www.ciagent.com

EQUIPMENT CONTAINMENT - DIKE METHOD

1. Materials needed: rebar or wooden stakes, hammer, staple gun or screws and screw driver, rake, shovel, string and C.I.Agent® Barrier Boom. Optional equipment: a small trench digger, 10 foot angle iron and granular Bentonite®.

2. Dig a trench around the perimeter of the equipment. Depth and width depends on your particular application. In the Dike method, the Barrier Boom raises above ground level.

3. Position stakes or rebar every 10 feet inside the trench. Place C.I.Agent® Barrier Boom inside the trench with the **BLACK** fabric side of the boom facing inside. Staple to stakes or lean against rebar.

4. Granular Bentonite® can be put in the trench at the bottom of the Barrier Boom. Carefully dump clean stone in the trench around the boom being careful not to crush the boom. Notice the mound that is being created over the Barrier Boom.

5. The C.I.Agent® Barrier Boom around this transformer provides complete protection should a spill occur.

ADDITIONAL INFORMATION

C.I.Agent Barrier Booms can be used in a variety of applications that may not be illustrated in this manual. If you have a particular need or application, please contact the corporate office at 866-242-4368.

Product and Pollution Insurance

C.I.Agent Solutions® is so confident in the quality and performance of its products that they are backed by a $2 Million Pollution Insurance and a $2 Million Product Liability Policy. C.I.Agent Solutions' products are manufactured under quality controlled conditions at our facility in Louisville, Ky. Testing of products is performed in our in-house lab as well as by independent third-party laboratories. Documented results on the performance of C.I.Agent Solutions' products can be found in Case Studies and testimonials on our website at www.ciagent.com.

Upon request, after the purchase of our product(s), C.I.Agent Solutions will provide a Certificate of Co-Insurance.

FULL CONTAINMENT - DIKE METHOD

If the subsoil around the area to be contained is sandy or non-Impervious, your may need a liner for full protection.

1. Materials needed: rebar or wooden stakes, hammer, staple gun or screws and screw driver, rake, shovel, string and C.I.Agent® Barrier Boom. Optional equipment: a small trench digger, 10 foot angle iron and granular Bentonite®.

2. Dig a trench around the perimeter of the substation. Depth and width depends on your particular application. In the Dike method, the Barrier Boom raises above ground level.

3. Position stakes or rebar every 10 feet inside the trench. Roll out C.I.Agent® Barrier Boom beside trench. The **BLACK** fabric side of the Barrier Boom must be up.

4. Stand the Barrier Boom up against the stake and staple or screw near the top of the Barrier Boom. If using rebar, lean Barrier Boom against it. ***Black fabric side to face the inside.***

5. Granular Bentonite® can be put in the trench at the bottom of the Barrier Boom. Carefully dump clean stone in the trench around the boom being careful not to crush the boom. An angle iron can be used to protect the Barrier Boom. Notice the boom is above ground level.

6. The clean stone forms a mound over the Barrier Boom.

7. Cover the area with clean stone and rake until the Barrier Boom is completely covered.

FULL CONTAINMENT - GRADE LEVEL METHOD

If the subsoil around the area to be contained is sandy or non-Impervious, your may need a liner for full protection.

1. Materials needed: rebar or wooden stakes, hammer, staple gun or screws and screw driver, rake, shovel, string and C.I.Agent® Barrier Boom. Optional equipment: a small trench digger, 10 foot angle iron and granular Bentonite®.

2. Dig a trench around the perimeter of the substation. Depth and width depends on your particular application of Barrier Boom. For this method, the Barrier Boom must be below grade level.

3. Inside the trench, string a line from one side of the trench to the other to keep the stakes and Barrier Boom straight.

4. Position stakes or rebar every 10 feet inside the trench. Roll out the C.I.Agent® Barrier Boom beside trench. The **BLACK** fabric side of the Barrier Boom must be up.

5. Optional: Granular Bentonite® can be placed in the trench to form a seal between the ground and the Barrier Boom.

6. Stand the Barrier Boom up against the stake and staple or screw near the top of the Barrier Boom. If using rebar, lean Barrier Boom against it. ***Black fabric side to face the inside.***

7. Stakes are trimmed off to ground level. Carefully dump clean stone in the trench and around the Barrier Boom being careful not to crush the boom. If using rebar, pull it out of the ground once clean stone is around the boom.

8. A 10 foot angle iron can be used to deflect the stone during the fill process. Rest the angle iron on the stakes or rebar and pull the angle iron to the next support during filling.

10. Cover area with clean stone and rake until the Barrier Boom is completely covered.

SECTION 31 35 29

SECONDARY CONTAINMENT SYSTEMS-
GEOSYNTHETIC BARRIER

PART 1 GENERAL

1.1 SECTION INCLUDES

A. Furnishing and installing a prefabricated and complete geosynthetic barrier and accessory material including excavation of soil materials to form a secondary containment system around oil storage tanks and oil-filled electrical equipment

B. Geosynthetic barriers typically installed as a "Passive" secondary containment measure also used in " Active Containment" situations to impede or block the flow of oil from reaching drainage structures or waterways

C. Excavation and backfilling shall be performed to prevent damage to adjacent properties, buildings, structures, utilities, underground piping, electric cable, cable trays, grounding systems, and other facilities.

1.2 RELATED SECTIONS

A. Section 02 30 00- Earthwork

B. Section 02 XX XX- Dewatering

1.3 REFERENCES

A. IEEE Std 980-1994 R2001 (The Institute of Electrical and Electronics Engineers) Guide for Containment and Control of Oil Spills in Substations.

B. Code of Federal Regulations (CFR) 40 CFR Protection of the Environment; PART 112- Oil Pollution Prevention.

C. AASHTO No. 57 (American Association Of State Highway And Transportation Officials)

1.4 QUALITY ASSURANCE

A. Design geosynthetic barrier under direct supervision of a Professional Engineer experienced in the design of such Work and to accommodate site conditions.

B. Excavations shall comply with the local Building Code and published standards.

C. Manufacturer shall be company(s) specializing in manufacturing geosynthetic barrier systems with minimum three years of documented experience.

D. Installer shall be company(s) specializing in installation of geosynthetic barrier or similar systems with minimum three years of documented experience.

E. Engage the services of an Independent Testing Laboratory to conduct testing required to determine gradation for cover material.

F. Engage the services of a trained manufacturer's representative to be on Project site during geosynthetic barrier installation.

1.5 SUBMITTALS

A. See Section 01 XX XX - Administrative Requirements for submittal procedures.

B. Submit qualification and experience record for designers.

C. Product Data: Provide component dimensions; describe components within assembly and anchorage or fasteners.

D. Shop Drawings: Indicate geosynthetic barrier dimensions, affected related Work and details including overlap at joints. If required, include required permits and site restoration plans.

E. Samples: Submit two samples 6 by 6 inches (150 by 150 mm) in size illustrating barrier materials.

F. Design Data: Provide physical characteristics and engineering calculations where required and identify dimensional limitations.

G. Warranty: Submit manufacturer warranty and ensure forms have been completed in Owner's name and registered with manufacturer.

1.6 DELIVERY, STORAGE AND PROTECTION

A. Handle products of this section in accordance with manufacturer's requirements.

B. Protect geosynthetic barrier materials during transport and on Project site storage prior to installation.

1.7 WARRANTY

A. Provide manufacturer warranty against failure of barrier material when installed properly including provision for replacement of failed units.

B. Warranty shall be in effect for the Service Life of installed product.

PART 2 PRODUCTS

2.1 MANUFACTURERS

A. Subject to Project requirements, manufacturers offering products to be incorporated in the work include the following:

1. C.I.Agent Solutions®; 11760 Commonwealth Dr., Louisville, KY 40299 office 502.267.0101 toll free 866.242.4368 fax 502.267.0181 website: http://www.ciagent.com

2.2 MATERIALS

A. Geosynthetic barrier shall be designed to prevent flow of hydrocarbons from a site by becoming an impervious barrier in the event of an oil release and allow unrestricted water flow during normal rainfall or snow melt events.

B. Barrier shall consist of three manufacturer assembled component parts:

1. Barrier Front Section shall be a basic geotextile fabric made from synthetic materials that is both hydrophobic and oleophilic with high wicking capability.

2. Barrier Middle Section shall be a layer of C.I.Agent®. C.I.Agent® is a blend of cross-linking polymers which are non-toxic, nonhazardous and environmentally friendly; made to encapsulate oils into a cohesive rubber-like mass.

3. Barrier Back Section shall be Agent-X. Agent-X is two layers of a geotextile with C.I.Agent® polymers laminated between the layers.

2.2 PERFORMANCE

A. Hydrocarbon flow rate: 0 gpm

B. Geosynthetic barrier must be able to flow a minimum of 3 GPM per square foot of material with one foot of head pressure

C. Solidify approximately a half gallon of oil per square foot

D. UV resistance: 70 percent

E. Oxidation resistance: 80 percent

F. Shall contain 12 to 16 oz. of loose C.I.Agent® polymers per square foot

G. Shall meet Spill Prevention Control and Countermeasures (SPCC) requirements in accordance with 40 CFR 112.

2.3 ACCESSORY MATERIALS

A. Reinforcement bars, wood stakes or other supports;

B. Staple gun;

C. Galvanized staples;

D. Hammer;

E. Shovel;

F. Rake;

G. Trench machine;

H. Steel or heavy duty plastic angle – length capable of spanning between supports.

I. Bentonite®.

2.4 FABRICATION

A. Fabricate components with minimum clearances around perimeter of assembly, yet enabling installation and dynamic movement of perimeter seal.

B. Accurately fit and secure joints and corners. Make joints flush.

C. Prepare components to receive anchor devices.

D. Arrange fasteners and attachments to conceal from view.

2.5 MATERIAL FOR COVER

A. Gradation requirements shall be determined in accordance with AASHTO No. 57.

B. For fills categorized as "crushed stone" or equivalent clean stone comply with the following:

Coarse Aggregate

Sieve Size		AASHTO No. 57 (percent passing)
50 mm	2 inch	-
37.5 mm	1.5 inch	100 min
25 mm	1 inch	95 - 100
19.0 mm	0.75 inch	-
12.5 mm	0.5 inch	25 - 60
9.5 mm	0.375 inch	-
4.75 mm	No. 4	10 max
2.36 mm	No. 8	5 max
1.18 mm	No. 16	-

PART 3 EXECUTION

3.1 EXAMINATION

A. Verify dimensions, tolerances, and method of attachment.

B. Verify that anchorage devices have been properly installed and located.

3.2 INSTALLATION

A. Avoid damage wherever excavation is being done. The width of such excavation shall not exceed the width actually necessary for the proper prosecution of the work.

B. Install geosynthetic barrier in accordance with manufacturer's instructions.

C. Overlap and splice barrier sections, as necessary, according to the shop drawings and the manufacturer's recommendations.

D. Barrier should not be cut or trimmed without the express approval of the manufacturer or their representative.

E. Attach to grade to permit sufficient adjustment to accommodate construction tolerances and other irregularities allowing expeditious progress of the work.

F. Comply with site owner and operator's safety practices particularly in close proximity to active electrical equipment.

3.2 FIELD QUALITY CONTROL

A. Perform gradation testing to indicate compliance with AASHTO #57.

B. Verify barrier is firmly attached to supports before placing cover material.

3.3 CLEANING AND PROTECTION

A. Remove any protective material.

B. Repair minor damage to surfaces to the satisfaction of the manufacturer prior to cover material being installed.

C. Protect barrier during installation of cover material.

END OF SECTION

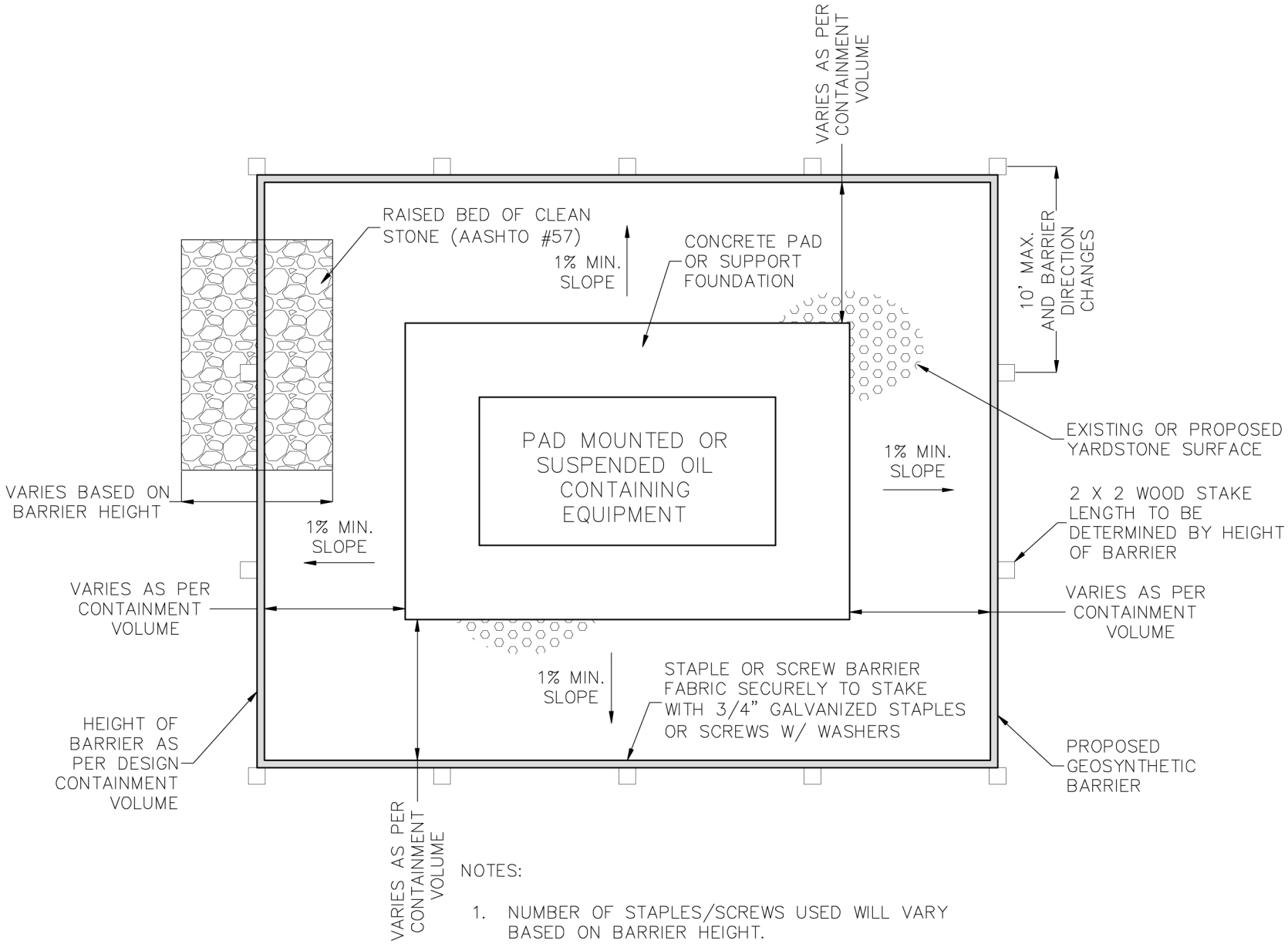

NOTES:

1. NUMBER OF STAPLES/SCREWS USED WILL VARY BASED ON BARRIER HEIGHT.
2. FIRE QUENCH YARDSTONE – AREA EXTENT AND DEPTH AS PER ENGINEER.

SECONDARY CONTAINMENT GEOSYNTHETIC BARRIER PLAN

SCALE: N.T.S.

TYPICAL SECONDARY CONTAINMENT GEOSYNTHETIC BARRIER DETAILS

DWG FILE:	DETAILS - PLAN
DATE:	MARCH 9, 2011
DRAWN BY:	M.T.H.
SCALE:	N.T.S.

ci agent solutions®
A Solutions Leader in Hydrocarbon Management
11760 Commonwealth Dr.
Louisville, KY 40299
866-242-4368
502-267-0101
F: 502-267-0181
www.ciagent.com

1 OF 1

TYPICAL SECONDARY CONTAINMENT GEOSYNTHETIC BARRIER DETAILS

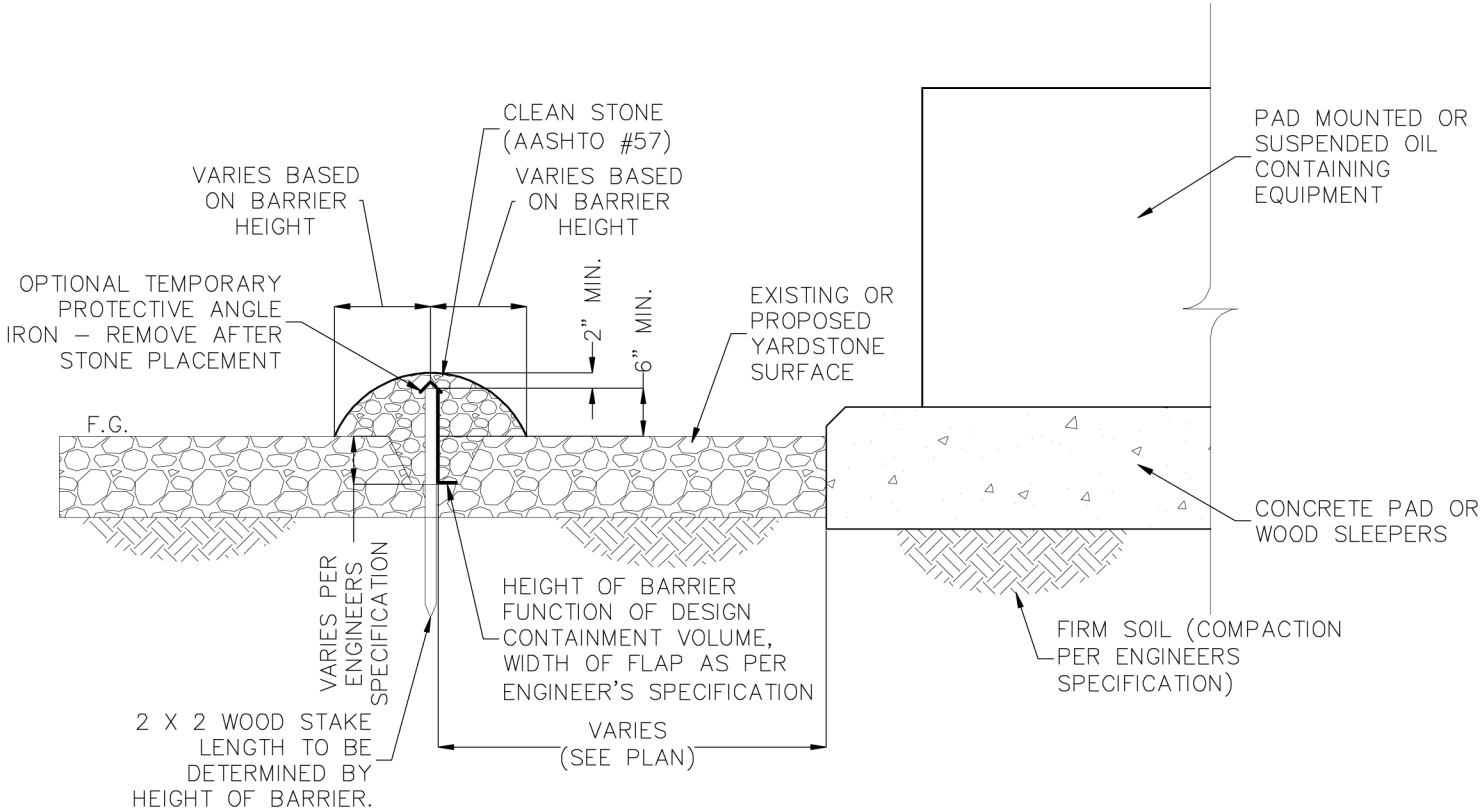

NOTES:

1. INSTALL BARRIER IN TRENCH – DEPTH AND WIDTH AS PER ENGINEER'S SPECIFICATION.
2. SEE PLAN FOR LOCATION OF BARRIER IN RELATION TO OIL CONTAINING EQUIPMENT.
3. FOR CONTAINMENT LAYOUTS THAT DO NOT TOTALLY ENCLOSE THE OIL CONTAINING EQUIPMENT – EXTEND BOTH ENDS OF THE BARRIER AT LEAST 5' UPSLOPE AT A 45° ANGLE TO THE MAIN BARRIER ALIGNMENT OR AS SHOWN ON THE PLAN.
4. (OPTIONAL) LAY PROTECTIVE ANGLE ON WOOD STAKES BEFORE INSTALLING STONE ADJACENT TO AND COVERING BARRIER.
5. BARRIER TO BE INSTALLED WITH THE BLACK (AGENT X) SIDE FACING INSIDE. FLAP, IF USED, ALSO TO FACE INSIDE.
6. OVERLAP ENDS OF BARRIER PIECE A MINIMUM OF 2" AND STAPLE/SCREW TO WOOD STAKE.
7. DO NOT CUT OR TRIM BARRIER WITHOUT MANUFACTURE/REPRESENTATIVE APPROVAL.

SECONDARY CONTAINMENT GEOSYNTHETIC BARRIER SECTION (with subsurface flow prevention flap)

SCALE: N.T.S.

DWG FILE:	DETAILS - SECTION
DATE:	MARCH 9, 2011
DRAWN BY:	M.T.H.
SCALE:	N.T.S.

agent solutions®
11760 Commonwealth Dr.
Louisville, KY 40299
866-242-4368
502-267-0101
F: 502-267-0181
www.ciagent.com

A Solutions Leader in Hydrocarbon Management

1 OF 1

TYPICAL SECONDARY CONTAINMENT GEOSYNTHETIC BARRIER DETAILS

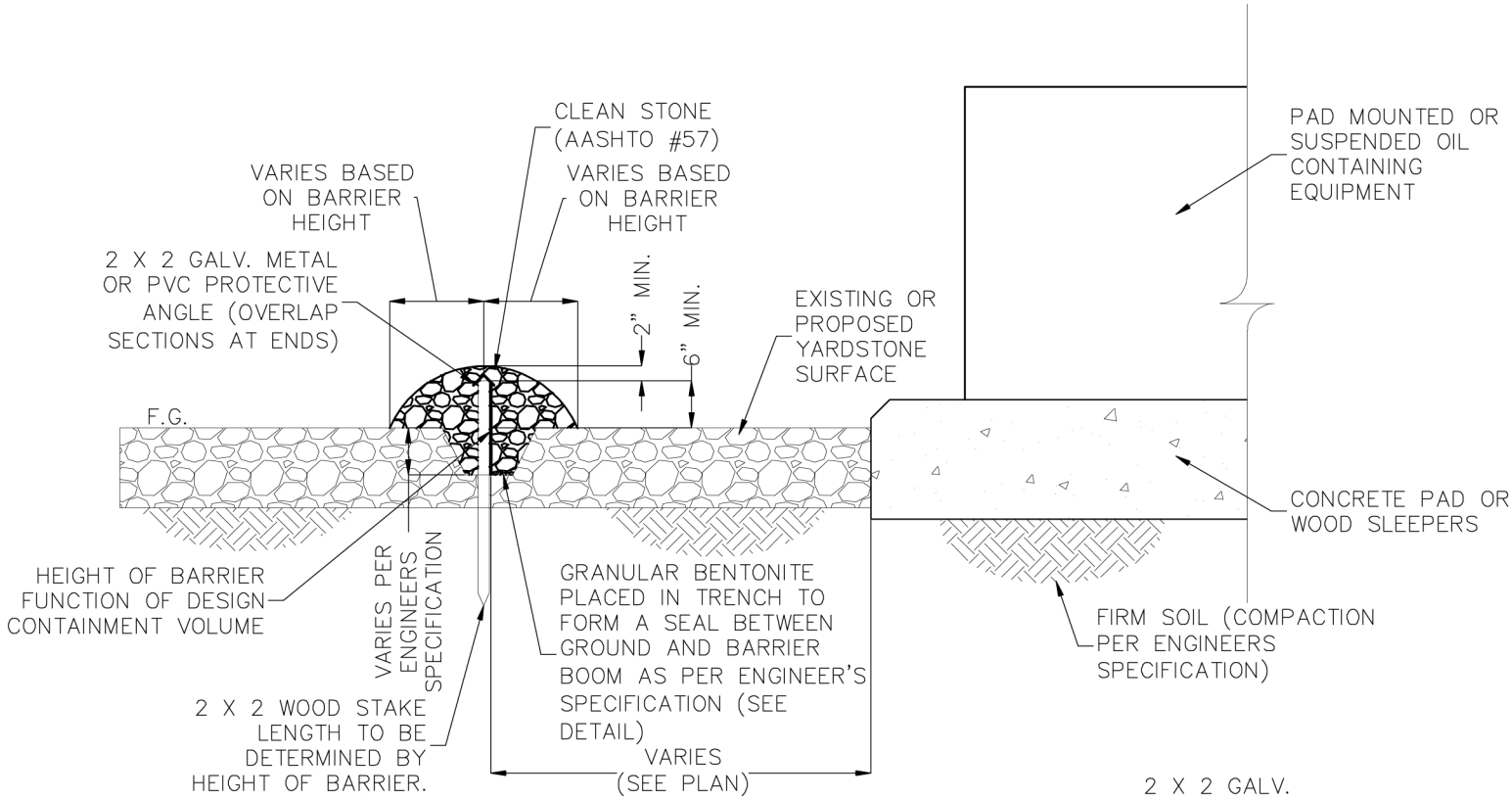

NOTES:

1. INSTALL BARRIER IN TRENCH – DEPTH AND WIDTH AS PER ENGINEER'S SPECIFICATION.
2. SEE PLAN FOR LOCATION OF BARRIER IN RELATION TO OIL CONTAINING EQUIPMENT.
3. FOR CONTAINMENT LAYOUTS THAT DO NOT TOTALLY ENCLOSE THE OIL CONTAINING EQUIPMENT – EXTEND BOTH ENDS OF THE BARRIER AT LEAST 5' UPSLOPE AT A 45° ANGLE TO THE MAIN BARRIER ALIGNMENT OR AS SHOWN ON THE PLAN.
4. (OPTIONAL) LAY PROTECTIVE ANGLE ON WOOD STAKES BEFORE INSTALLING STONE ADJACENT TO AND COVERING BARRIER.
5. BARRIER TO BE INSTALLED WITH THE BLACK (AGENT X) SIDE FACING INSIDE. FLAP, IF USED, ALSO TO FACE INSIDE.
6. OVERLAP ENDS OF BARRIER PIECE A MINIMUM OF 2" AND STAPLE/SCREW TO WOOD STAKE.
7. DO NOT CUT OR TRIM BARRIER WITHOUT MANUFACTURE/REPRESENTATIVE APPROVAL.

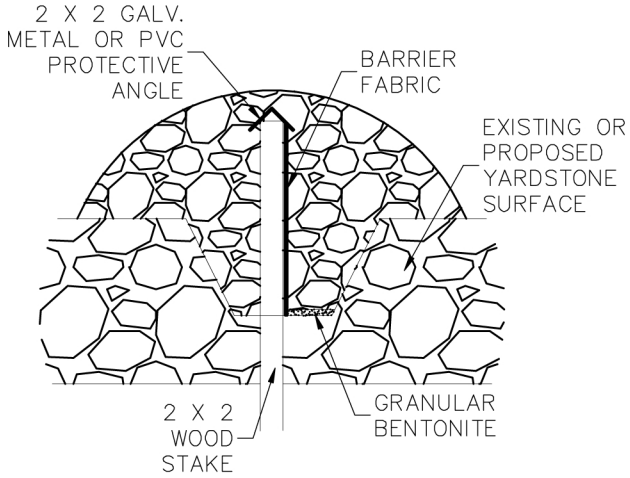

BARRIER DETAIL

SCALE: N.T.S.

SECONDARY CONTAINMENT GEOSYNTHETIC BARRIER SECTION

SCALE: N.T.S.

DWG FILE: DETAILS - PLAN
DATE: MARCH 9, 2011
DRAWN BY: M.T.H.
SCALE: N.T.S.

ci agent solutions®
A Solutions Leader in Hydrocarbon Management
11760 Commonwealth Dr.
Louisville, KY 40299
866-242-4368
502-267-0101
F: 502-267-0181
www.ciagent.com

1 OF 1

APPENDIX C
OPINION OF PROBABLE CONSTRUCTION COST

Village of Winnetka
Transformer Yard and Generation Plant Fire Protection Assessment

Opinion of Probable Construction Costs
Generation Plant
Wet Fire Protection System

Item	Cost[a]
Basement Wet Fire Protection System	$ 86,000
Steam Turbine Bearing Fire Protection System	$ 3,000
Backflow Preventer	$ 15,000
Subtotal A	$ 104,000
Demolition	$ 5,000
Fire Alarm (10% of Subtotal A)	$ 11,000
Subtotal B	$ 120,000
General Conditions (8% of Subtotal B)	$ 10,000
Subtotal C	$ 130,000
Contingencies and Technical Services (35% of Subtotal C)	$ 46,000
Total Capital Costs	**$ 176,000**

[a] Based on budgetary equipment costs and January 2015 construction cost data.

Village of Winnetka
Transformer Yard and Generation Plant Fire Protection Assessment

Opinion of Probable Construction Costs
Generation Plant
Compressed Air Foam System (CAFS) Protection

Item	Cost[a]
Generation Plant CAFS Piping	$ 49,000
Subtotal A	$ 49,000
Demolition	$ 5,000
Electrical/Fire Alarm (15% of Subtotal A)	$ 7,000
Subtotal B	$ 61,000
General Conditions (8% of Subtotal B)	$ 5,000
Subtotal C	$ 66,000
Contingencies and Technical Services (35% of Subtotal C)	$ 24,000
Total Capital Costs	**$ 90,000**

[a] Based on budgetary equipment costs and January 2015 construction cost data.

Village of Winnetka
Transformer Yard and Generation Plant Fire Protection Assessment

Opinion of Probable Construction Costs
Transformer Yard
Retrofilling of Transformers

Item	Cost[a]
Retrofill Transformer #1	$ 77,000
Retrofill Transformer #2	$ 72,000
Retrofill Transformer #3	$ 108,000
Retrofill Transformer #4	$ 72,000
Sprinkler Protection for Voltage Regulator	$ 67,000
Subtotal A	$ 396,000
Demolition	$ 26,000
Electrical and Controls (5% of Subtotal A)	$ 20,000
Site (2% of Subtotal A)	$ 8,000
Subtotal B	$ 450,000
General Conditions (8% of Subtotal B)	$ 37,000
Subtotal C	$ 487,000
Contingencies and Technical Services (35% of Subtotal C)	$ 174,000
Total Capital Costs	**$ 661,000**

[a] Based on budgetary equipment costs and January 2015 construction cost data.

Village of Winnetka
Transformer Yard and Generation Plant Fire Protection Assessment

Opinion of Probable Construction Costs
Transformer Yard
Equipment Replacement

Item	Cost[a]
Replace Transformer #1	$ 179,000
Replace Transformer #2	$ 124,000
Replace Transformer #3	$ 248,000
Replace Transformer #4	$ 124,000
Sprinkler Protection for Voltage Regulator	$ 67,000
Subtotal A	$ 742,000
Demolition/Environmental (10% of Subtotal A)	$ 76,000
Electrical and Controls (15% of Subtotal A)	$ 114,000
Site (7% of Subtotal A)	$ 53,000
Subtotal B	$ 985,000
General Conditions (8% of Subtotal B)	$ 80,000
Subtotal C	$ 1,065,000
Contingencies and Technical Services (35% of Subtotal C)	$ 380,000
Total Capital Costs	**$ 1,445,000**

[a] Based on budgetary equipment costs and January 2015 construction cost data.

Village of Winnetka
Transformer Yard and Generation Plant Fire Protection Assessment

Opinion of Probable Construction Costs
Transformer Yard
Deluge Fire Protection System

Item	Cost[a]
Deluge Fire Protection System Piping/Equipment	$ 104,000
Backflow Preventer	$ 15,000
Subtotal A	$ 119,000
Fire Alarm (15% of Subtotal A)	$ 18,000
Site (7% of Subtotal A)	$ 8,000
Subtotal B	$ 145,000
General Conditions (8% of Subtotal B)	$ 12,000
Subtotal C	$ 157,000
Contingencies and Technical Services (35% of Subtotal C)	$ 56,000
Total Capital Costs	**$ 213,000**

[a] Based on budgetary equipment costs and January 2015 construction cost data.

Village of Winnetka
Transformer Yard and Generation Plant Fire Protection Assessment

Opinion of Probable Construction Costs
Transformer Yard
Compressed Air Foam System Protection

Item	Cost[a]
Transformer Yard CAFS Piping	$ 108,000
Underground Piping	$ 11,000
Subtotal A	$ 119,000
Fire Alarm (15% of Subtotal A)	$ 18,000
Site (7% of Subtotal A)	$ 8,000
Subtotal B	$ 145,000
General Conditions (8% of Subtotal B)	$ 12,000
Subtotal C	$ 157,000
Contingencies and Technical Services (35% of Subtotal C)	$ 56,000
Total Capital Costs	**$ 213,000**

[a] Based on budgetary equipment costs and January 2015 construction cost data.

Village of Winnetka
Transformer Yard and Generation Plant Fire Protection Assessment

Opinion of Probable Construction Costs
Transformer Yard
Fire Barriers - Prefabricated Walls

Item	Cost[a]
Fire Barriers	$ 235,000
Subtotal A	$ 235,000
Demolition	$ 5,000
Site (7% of Subtotal A)	$ 17,000
Subtotal B	$ 257,000
General Conditions (8% of Subtotal B)	$ 21,000
Subtotal C	$ 278,000
Contingencies and Technical Services (35% of Subtotal C)	$ 99,000
Total Capital Costs	**$ 377,000**

[a] Based on budgetary equipment costs and January 2015 construction cost data.

Village of Winnetka
Transformer Yard and Generation Plant Fire Protection Assessment

Opinion of Probable Construction Costs
Transformer Yard
Secondary Containment - Expand Existing

Item	Cost[a]
Concrete	$ 82,000
Excavation	$ 43,000
Sump	$ 6,000
Fencing	$ 8,000
Subtotal A	$ 139,000
Demolition	$ 10,000
Piping	$ 5,000
Site (7% of Subtotal A)	$ 10,000
Subtotal B	$ 164,000
General Conditions (8% of Subtotal B)	$ 13,000
Subtotal C	$ 177,000
Contingencies and Technical Services (35% of Subtotal C)	$ 63,000
Total Capital Costs	**$ 240,000**

[a] Based on budgetary equipment costs and January 2015 construction cost data.

Village of Winnetka
Transformer Yard and Generation Plant Fire Protection Assessment

Opinion of Probable Construction Costs
Transformer Yard
Secondary Containment - Oil/Water Separator

Item		Cost[a]
2,000 gpm Oil/Water Interceptor	$	61,000
Excavation	$	19,000
Asphalt	$	7,000
Subtotal A	$	87,000
Demolition	$	10,000
Piping	$	158,000
Electrical and Controls (20% of Subtotal A)	$	17,700
Site (7% of Subtotal A)	$	6,200
Subtotal B	$	278,900
General Conditions (8% of Subtotal B)	$	23,000
Subtotal C	$	301,900
Contingencies and Technical Services (35% of Subtotal C)	$	108,000
Total Capital Costs	**$**	**409,900**

[a] Based on budgetary equipment costs and January 2015 construction cost data.

Village of Winnetka
Transformer Yard and Generation Plant Fire Protection Assessment

Opinion of Probable Construction Costs
Transformer Yard
Secondary Containment - Oil Solidification

Item	Cost[a]
Oil Solidification Materials	$ 21,000
PVC Liner	$ 40,000
Washed Rock Base	$ 13,000
Replace Existing Curb	$ 4,000
Draintile	$ 12,000
Storm Sewer	$ 28,000
Excavation and Soil Disposal	$ 15,000
Subtotal A	$ 133,000
Demolition	$ 15,000
Site (7% subtotal A)	$ 9,000
Subtotal B	$ 157,000
General Conditions (8% of Subtotal B)	$ 13,000
Subtotal C	$ 170,000
Contingencies and Technical Services (35% of Subtotal C)	$ 61,000
Total Capital Costs	**$ 231,000**

[a] Based on budgetary equipment costs and January 2015 construction cost data.

Village of Winnetka
Transformer Yard and Generation Plant Fire Protection Assessment

Opinion of Probable Construction Costs
Transformer Yard
Barrier Wall

Item	Cost[a]
Barrier Wall	$ 57,000
Excavation and Soil Disposal	$ 4,000
Subtotal A	$ 61,000
Demolition	$ 5,000
Site (7% of Subtotal A)	$ 4,000
Subtotal B	$ 70,000
General Conditions (8% of Subtotal B)	$ 6,000
Subtotal C	$ 76,000
Contingencies and Technical Services (35% of Subtotal C)	$ 27,000
Total Capital Costs	**$ 103,000**

[a] Based on budgetary equipment costs and January 2015 construction cost data.

Village of Winnetka
Transformer Yard and Generation Plant Fire Protection Assessment

Opinion of Probable Construction Costs
Transformer Yard
Electric Manhole Modifications

Item	Cost[a]
Electrical Manhole Sealing and Waterproofing	$ 16,000
Subtotal A	$ 16,000
Demolition	$ 5,000
Site (7% of Subtotal A)	$ 1,000
Subtotal B	$ 22,000
General Conditions (8% of Subtotal B)	$ 2,000
Subtotal C	$ 24,000
Contingencies and Technical Services (35% of Subtotal C)	$ 9,000
Total Capital Costs	**$ 33,000**

[a] Based on budgetary equipment costs and January 2015 construction cost data.

Village of Winnetka
Transformer Yard and Generation Plant Fire Protection Assessment

Opinion of Probable Construction Costs
Transformer Yard or Generation Plant
Fire Pump - Basement Room

Item	Cost[a]
Fire Pump, Jockey Pump, and Controllers	$ 58,000
Demolition	$ 1,000
Room Construction	$ 74,000
Subtotal A	$ 133,000
Piping	$ 15,000
Fire Alarm (5% of Subtotal A)	$ 7,000
Utility Power to Fire Pump	$ 110,000
Existing Electical Relocation	$ 149,000
Site (7% of Subtotal A)	$ 9,000
Subtotal B	$ 423,000
General Conditions (8% of Subtotal B)	$ 35,000
Subtotal C	$ 458,000
Contingencies and Technical Services (35% of Subtotal C)	$ 164,000
Total Capital Costs	**$ 622,000**

[a] Based on budgetary equipment costs and January 2015 construction cost data.

Village of Winnetka
Transformer Yard and Generation Plant Fire Protection Assessment

Opinion of Probable Construction Costs
Transformer Yard
CAFS Equipment

Item	Cost[a]
CAFS Equipment	$ 750,000
Subtotal A	$ 750,000
Electrical (5% of Subtotal A)	$ 38,000
Subtotal B	$ 788,000
General Conditions (8% of Subtotal B)	$ 64,000
Subtotal C	$ 852,000
Contingencies and Technical Services (35% of Subtotal C)	$ 304,000
Total Capital Costs	**$ 1,156,000**

[a] Based on budgetary equipment costs and January 2015 construction cost data.

Village of Winnetka
Transformer Yard and Generation Plant Fire Protection Assessment

Opinion of Probable Construction Costs
Transformer Yard or Generation Plant
Fire Pump - Sub-Basement Room

Item	Cost[a]
Fire Pump, Jockey Pump, and Controllers	$ 58,000
Demolition	$ 1,000
Room Construction	$ 85,000
Subtotal A	$ 144,000
Piping	$ 15,000
Fire Alarm (5% of Subtotal A)	$ 7,000
Utility Power to Fire Pump	$ 110,000
Existing Electrical Relocation	$ 149,000
Site (7% of Subtotal A)	$ 10,000
Subtotal B	$ 435,000
General Conditions (8% of Subtotal B)	$ 35,000
Subtotal C	$ 470,000
Contingencies and Technical Services (35% of Subtotal C)	$ 168,000
Total Capital Costs	**$ 638,000**

[a] Based on budgetary equipment costs and January 2015 construction cost data.

APPENDIX D
FIRE PUMP ROOM LAYOUT DRAWINGS

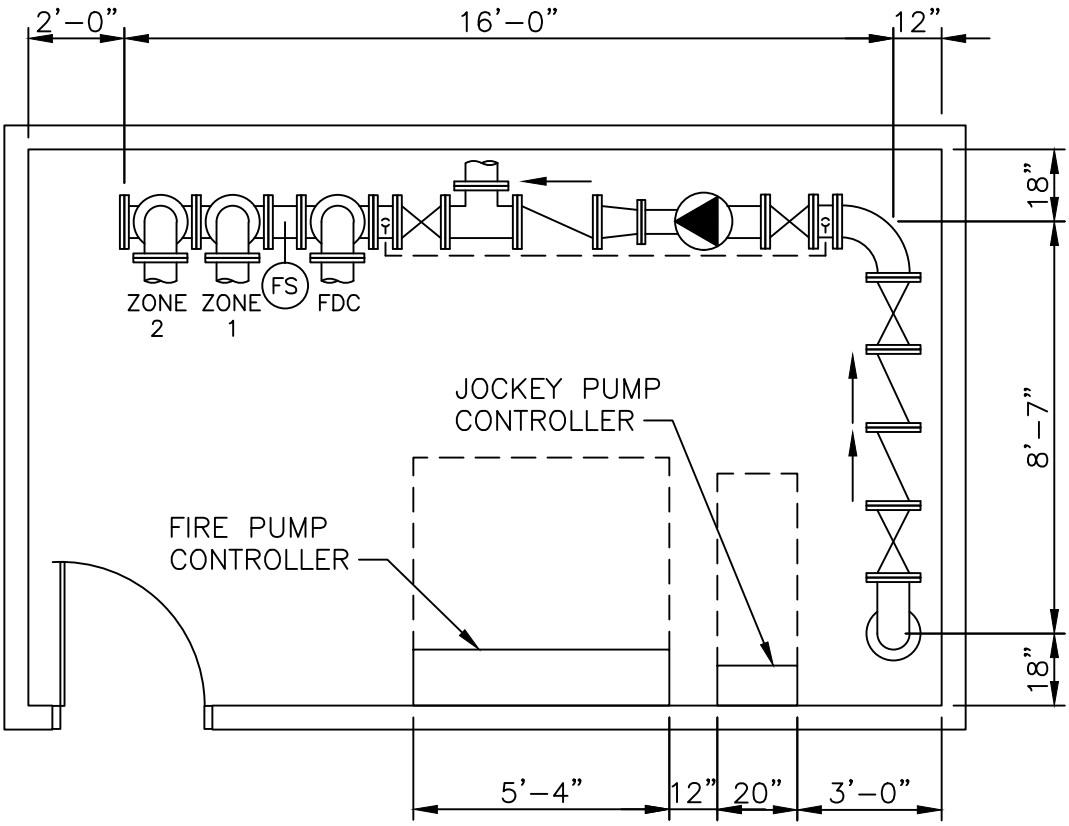

FIRE PUMP ROOM – BASEMENT

0 1' 2' 4' 8'

N

FIRE PUMP ROOM - BASEMENT

TRANSFORMER YARD AND GENERATION PLANT
FIRE PROTECTION ASSESSMENT
VILLAGE OF WINNETKA
WINNETKA, IL

STRAND ASSOCIATES®

F1.1

1619.008

File: S:\MAD\1600--1699\1619\008\Acad\FIRE PUMP ROOM.dwg Time: Jan 27, 2015 – 7:51am

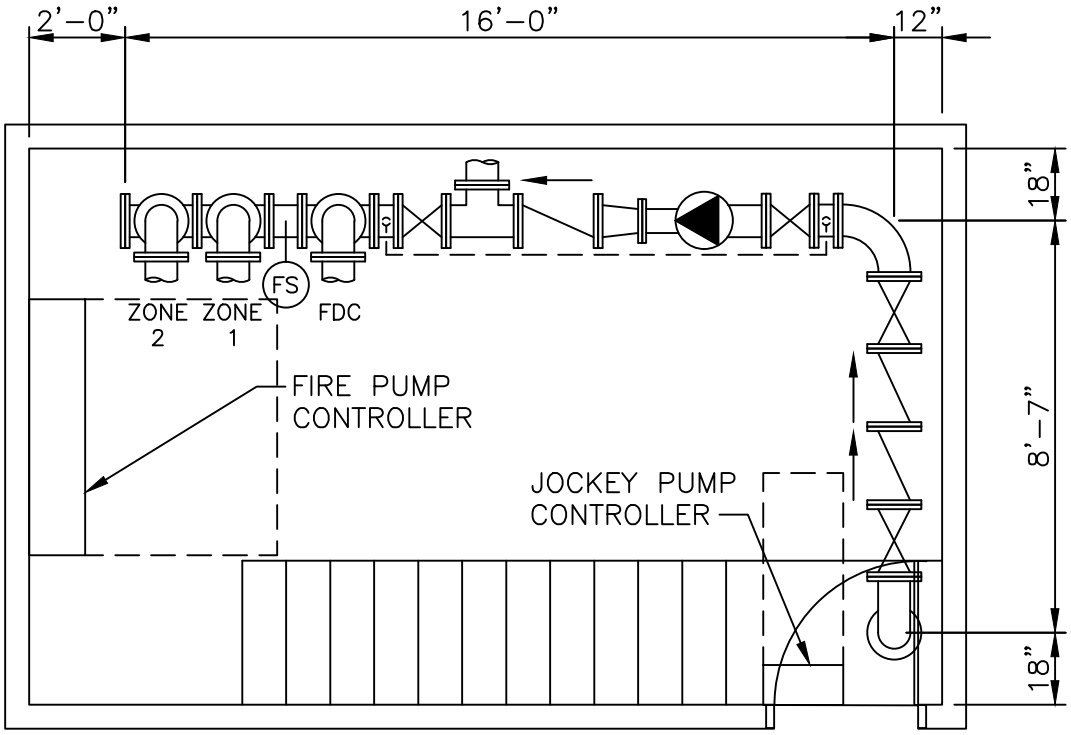

FIRE PUMP ROOM – SUB–BASEMENT

0 1' 2' 4' 8'

N

File: S:\MAD\1600--1699\1619\008\Acad\FIRE PUMP ROOM.dwg Time: Jan 27, 2015 – 7:52am

FIRE PUMP ROOM - SUB-BASEMENT

TRANSFORMER YARD AND GENERATION PLANT
FIRE PROTECTION ASSESSMENT
VILLAGE OF WINNETKA
WINNETKA, IL

STRAND ASSOCIATES®

F1.2

1619.008

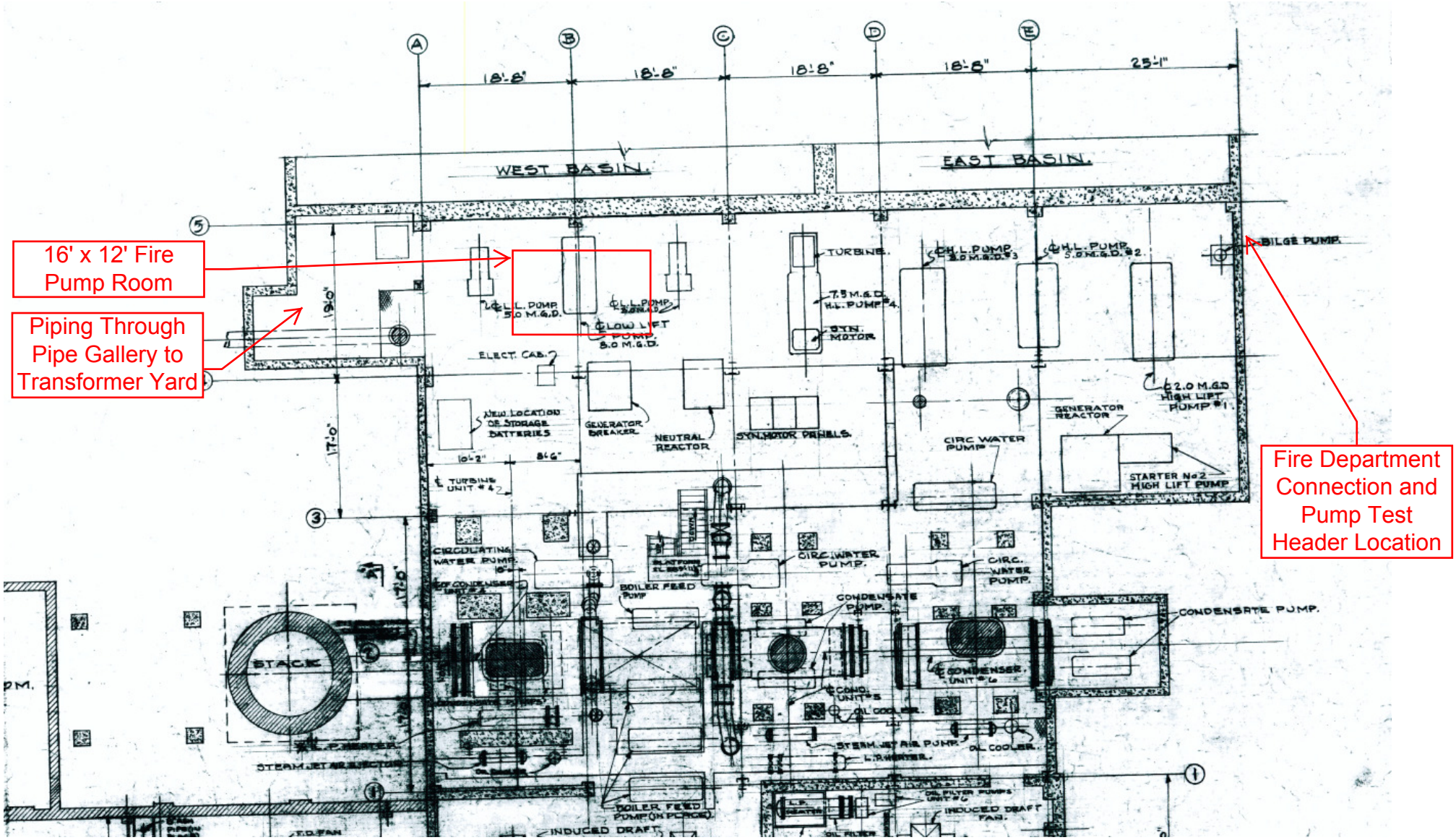
16' x 12' Fire Pump Room
Piping Through Pipe Gallery to Transformer Yard
Fire Department Connection and Pump Test Header Location
WEST BASIN
EAST BASIN
18'-8"
25'-1"
BILGE PUMP
TURBINE
H.L. PUMP 5.0 M.G.D.
LOW LIFT PUMP 8.0 M.G.D.
ELECT. CAB.
NEW LOCATION OF STORAGE BATTERIES
GENERATOR BREAKER
NEUTRAL REACTOR
SYN. MOTOR PANELS
GENERATOR REACTOR
CIRC. WATER PUMP
STARTER No 2 HIGH LIFT PUMP
2.0 M.G.D HIGH LIFT PUMP #1
TURBINE UNIT #2
CIRCULATING WATER PUMP
BOILER FEED PUMP
CONDENSATE PUMP
CONDENSER UNIT #6
COND. UNIT #5
OIL COOLER
STEAM JET AIR PUMP
L.P. HEATER
STACK
INDUCED DRAFT FAN

APPENDIX E
CAFS EQUIPMENT INSTALLATION LOCATION

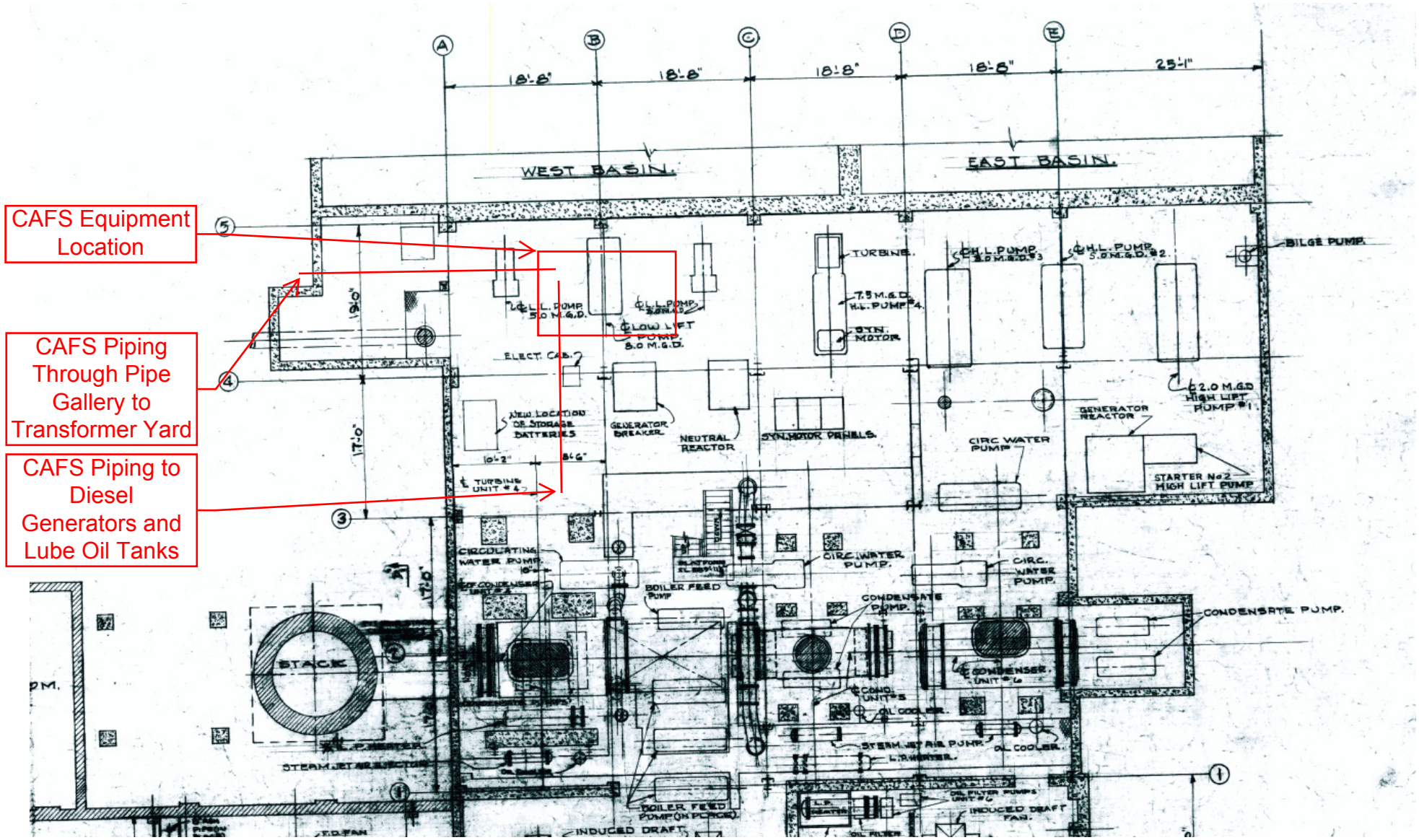
CAFS Equipment Location
CAFS Piping Through Pipe Gallery to Transformer Yard
CAFS Piping to Diesel Generators and Lube Oil Tanks
WEST BASIN
EAST BASIN
18'-8"
18'-8"
18'-8"
18'-8"
25'-1"
TURBINE
BILGE PUMP
L.L. PUMP 5.0 M.G.D.
LOW LIFT PUMP 8.0 M.G.D.
7.5 M.G.D. H.L. PUMP #4
SYN. MOTOR
ELECT. CAB.
NEW LOCATION OF STORAGE BATTERIES
GENERATOR BREAKER
NEUTRAL REACTOR
SYN. MOTOR PANELS
CIRC. WATER PUMP
GENERATOR REACTOR
2.0 M.G.D. HIGH LIFT PUMP #1
STARTER No 2 HIGH LIFT PUMP
TURBINE UNIT #2
CIRCULATING WATER PUMP
BOILER FEED PUMP
CONDENSATE PUMP
CONDENSER UNIT #6
COND. UNIT #5
OIL COOLER
STEAM JET AIR PUMP
L.P. HEATER
STACK
BOILER FEED PUMP (IN PLACE)
INDUCED DRAFT FAN
OIL FILTER PUMPS UNIT #6
OIL FILTER

APPENDIX F
GENERATION PLANT LAYOUT DRAWINGS

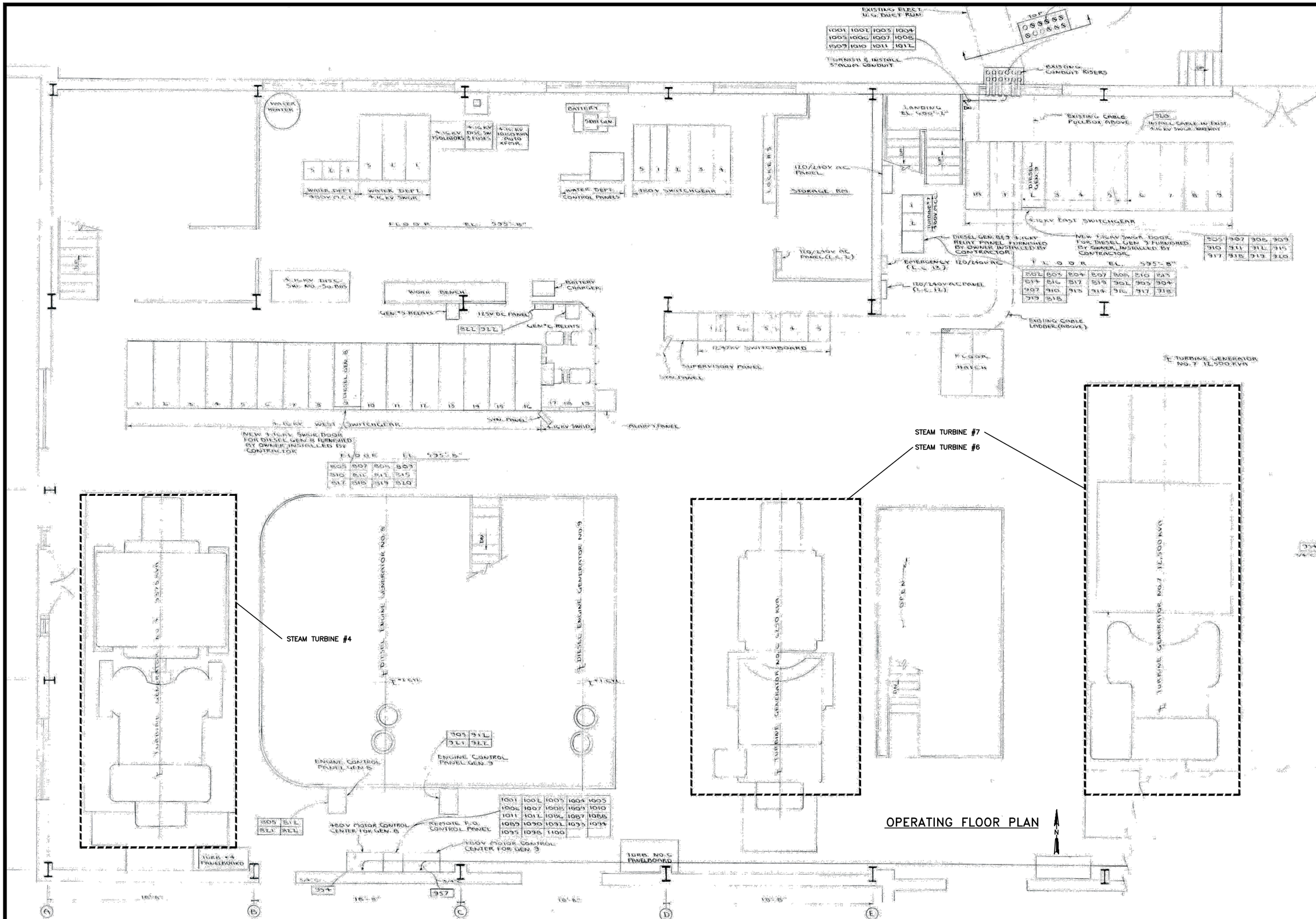

NO.	REVISIONS	DATE:

OPERATING FLOOR PLAN

TRANSFORMER YARD AND GENERATION PLANT
FIRE PROTECTION ASSESSMENT
VILLAGE OF WINNETKA
WINNETKA, IL

JOB NO. 1619.008

PROJECT MGR. BRANDT

STRAND ASSOCIATES®

SHEET F1.3

File: S:\MAD\1600--1699\1619\008\Acad\F1.2.dwg Time: Jan 27, 2015 - 8:00am

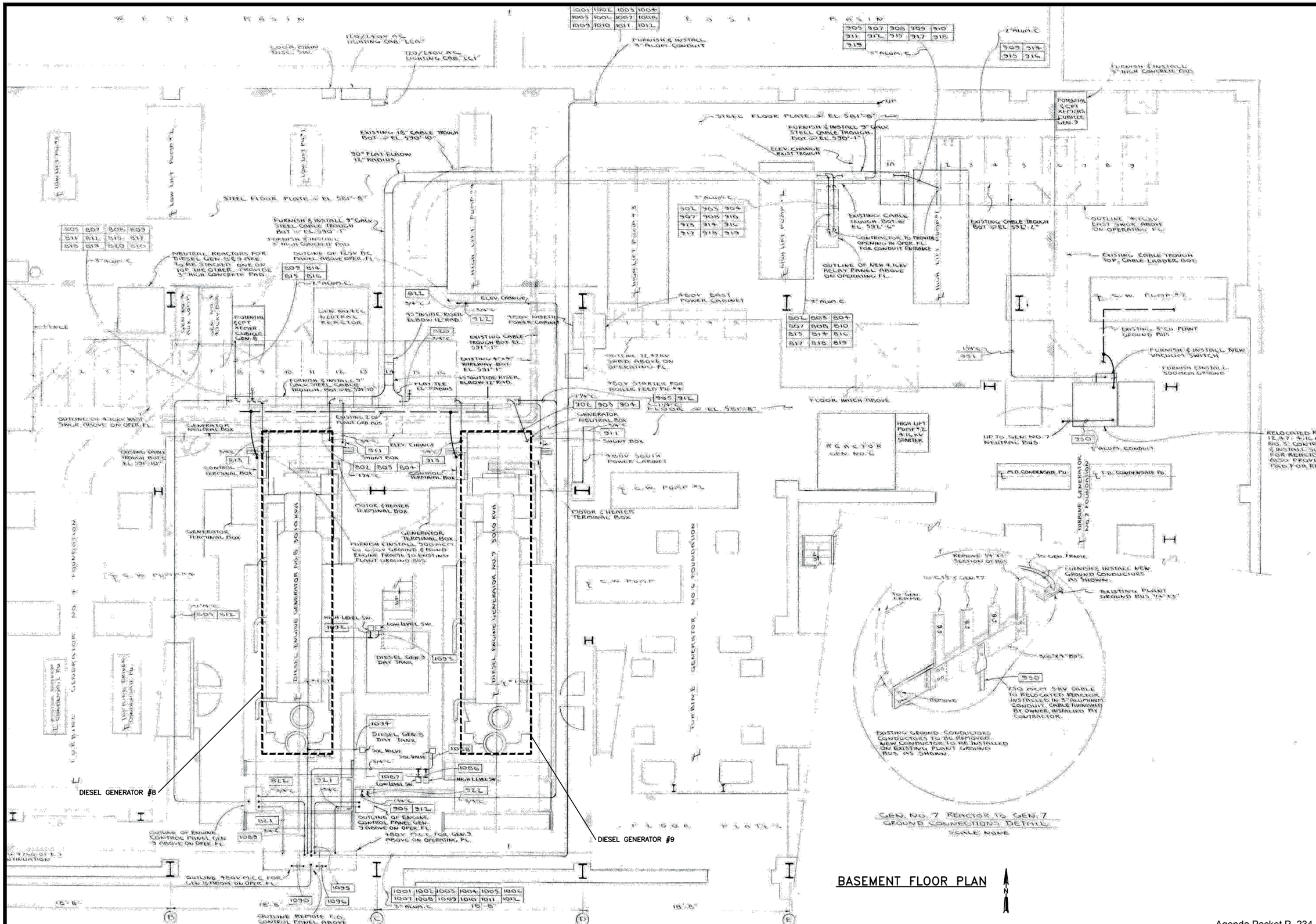

NO.	REVISIONS	DATE:

BASEMENT FLOOR PLAN

TRANSFORMER YARD AND GENERATION PLANT
FIRE PROTECTION ASSESSMENT
VILLAGE OF WINNETKA
WINNETKA, IL

JOB NO. 1619.008

PROJECT MGR. BRANDT

STRAND ASSOCIATES®

SHEET F1.4

File: S:\MAD\1600--1699\1619\008\Acad\F1.1.dwg Time: Jan 27, 2015 - 8:01am

For more location information please visit www.strand.com

Office Locations

Brenham, TX | 979.836.7937

Cincinnati, Ohio | 513.861.5600

Columbus, Indiana | 812.372.9911

Columbus, Ohio | 614.835.0460

Indianapolis, Indiana | 317.423.0935

Joliet, Illinois | 815.744.4200

Lexington, Kentucky | 859.225.8500

Louisville, Kentucky | 502.583.7020

Madison, Wisconsin* | 608.251.4843

Milwaukee, Wisconsin | 414.271.0771

Phoenix, Arizona | 602.437.3733

*Corporate Headquarters

STRAND ASSOCIATES®

Agenda Item Executive Summary

Title: Overlay District Uses

Presenter: Michael D'Onofrio, Director of Community Development

Agenda Date: 03/10/2015

Consent: ☐ YES ☑ NO

☐ Ordinance
☐ Resolution
☐ Bid Authorization/Award
☑ Policy Direction
☐ Informational Only

Item History:

November 6, 2014 Council Meeting, Agenda Packet pp. 47-124
December 9, 2014 Study Session, Agenda Packet pp. 19-51

Executive Summary:

At the December 9, 2014 Study Session, there was discussion concerning the Special Use Permit (SUP) process. The agenda packet for this meeting is included as Attachment A. The discussion centered around two topics: (1) streamlining the SUP process; and (2) proposed reclassification of a number of use groups from special uses to permitted uses associated with the Overlay District. These discussions resulted in two follow-up items for Staff.

With respect to streamlining the SUP process, a series of recommendations will be presented to the Council in the form of a draft ordinance on March 17. The more significant modifications will include: (1) having only the Plan Commission review SUP applications in the Overlay District; (2) modifying the standards for granting SUPs to more closely correlate to the purpose and intent of the Overlay District by removing standards that are not applicable; and (3) shorten the notification process by eliminating the newspaper publication requirement.

At the conclusion of the December 9 meeting, the Council decided to further consider reclassifying five use groups - (1) personal services; (2) educational; (3) construction-related; (4) financial services; and, (5) medical. However, with respect to the personal services use group, Council directed staff to draft language amending these uses from special to permitted. Staff has proposed three amendments to Section 17.46.010, Table of Sses, of the Village Code to accomplish this change.

If the Council wishes to proceed with reclassification of any of the use groups, it will require a text amendment to the Zoning Ordinance and thus include: drafting a text amendment ordinance, publishing a legal notice, holding a public hearing (held before the Village Council) and introducing and adopting an ordinance. This process would take approximately six weeks, with anticipated adoption of an ordinance on April 21, 2015.

Recommendation:

1. Provide policy direction on proposed amendments to Personal Service Uses.
2. Provide policy direction on reclassification of educational, construction related, financial service and medical and related use groups from special to permitted uses.

Attachments:

Attachment A – December 9, 2014 Agenda Packet
Attachment B – Table of Uses (Section 17.46.010 of VOW Code)
Attachment C – Proposed Amendments – Personal Service Uses

AGENDA REPORT

TO: Village Council

PREPARED BY: Michael D'Onofrio, Director of Community Development

SUBJECT: Overlay District Uses

DATE: March 6, 2015

REF: December 9, 2014 Council Meeting pp. 19-51

Introduction

At the December 9, 2014 Study Session, there was discussion concerning the Special Use Permit (SUP) process. The agenda packet for this meeting is included as Attachment A. The discussion centered around two topics: (1) streamlining the SUP process; and (2) proposed reclassification of a number of use groups from special uses to permitted uses associated with the Overlay District. The result of those discussions resulted in two follow-up items that staff was asked to complete.

Streamlining the Special Use Process

The Council requested proposed amendments to the Zoning Ordinance that would streamline the SUP approval process, which will also expedite the SUP process for uses in the Overlay District. In order to accomplish this goal, the proposed amendments will address components of the SUP regulations. First, it will be recommended that only the Plan Commission be responsible for reviewing SUP applications in the Overlay District. Second, the standards for granting a SUP will be revised to more closely correlate to the purpose and intent of the Overlay District, removing standards that are not applicable. Third, the notification process will be shortened by eliminating newspaper publication (mail notice still to be provided). Taken together, the proposed amendments would clarify and reduce the amount of time for an applicant to complete the SUP process. These proposed amendments will come before the Council on March 17, 2015.

Reclassification of Use Groups

At the conclusion of the December Study Session, the Council wished to further consider reclassifying five use groups from special to permitted uses, which included personal services, educational, construction-related, financial services and medical. With the exception of personal services, there was not Council consensus on the remaining use groups. Therefore, there was Council consensus for staff to prepare draft language allowing the personal services category to be reclassified from a special to a permitted use. The language associated with this change is included below and in Attachment C.

Proposed Amendment to Personal Service Uses

At the December 9 meeting, there was Council consensus on amending the Zoning Ordinance to reclassify personal uses from a special use to a permitted use. Staff was asked to provide language to the Council as to how the personal services would be defined and any conditions which might be placed on it.

There are factors concerning personal uses which need highlighting. First, in the past ten years, a total of seven SUP applications were made for these types of facilities; all seven were approved. This represents 16% of all SUP applications made during that same period. Second, the average size of these facilities range in size from 980 s.f. to 2,170 s.f., with the average size being 1,580 s.f. The Business Community Development Commission (BCDC) recommended that personal service establishments be a permitted use and limit the size to 3,000 s.f.

Staff has drafted proposed amendments to Section17.46.010.B and P, Table of Uses, of the Village Code (Attachment C) pertaining to personal service establishments as follows:

1. Under Section 17.46.010.B, Personal Service Establishments and Custom Craft Uses, the following section has been drafted:

   Personal fitness services, including health clubs, fitness/exercise/weight loss clinics, yoga/dance/martial arts studios, and similar facilities.

   The section has also been amended to allow such above listed facilities to be permitted uses, if they are less than or equal to 2,500 s.f. gross floor area. Facilities greater than 2,500 s.f. of gross floor area would still require a special use.

2. Under Section 17.46.010.B, Personal Service Establishments and Custom Craft Uses, the following use has been deleted:

   Weight loss clinic/diet center

3. Under Section 17.46.010.P, Cultural, Recreational and Entertainment Uses, the following use has been deleted:

   Health club

Potential Amendments to Uses

The reclassification of certain uses from special to permitted was recommended by the BCDC after its review of the Overlay District. Specifically, it recommended that the uses which fall into one of the five use group categories, listed below, be permitted by right (currently allowed as SUP only), with the condition that size be limited to 3,000 s.f.

1. Personal Service Uses (includes fitness studios and personal training facilities)
2. Educational Uses

3. Construction-Related Uses (includes architects, interior design services and home builders)
4. Financial Service Uses (not including banks)
5. Medical and Related Uses

Within each one of the use groups, there are a number of existing uses identified in Section 16.46.010, Table of Uses, of the Village Code (Attachment B) that fall under the broader group heading. For example, under Construction-Related Uses, the following individual uses (as identified in the Table of uses), would fall under that category: plumbing, roofing, electrical, and HVAC establishments; interior decorating services; professional offices (architects, home builders). Therefore, if this use group was reclassified, it would result in six individual uses being changed from special to permitted uses. Following is a summary, by proposed use group, of the number of individual uses identified in Attachment B which would be reclassified to permitted uses.

1. Personal Service Uses – 2
2. Educational Uses – 3
3. Construction Related Uses – 6
4. Financial Services Uses – 6
5. Medical and Related Uses – 9

This figure totals 26 current individual special uses, which represents 38% of the 69 special uses that are highlighted and listed in Attachment B.

Next Steps

If the Council decides to proceed with the text amendment to the Table of Uses, the following are the steps which need to be taken and the associated timeframes.

TASK	**TIMEFRAME**
Village Attorney, with staff input, drafts ordinance amending Table of uses	March 11 – March 16
Publish legal notice (no more than 30 or fewer than 15 days prior to public hearing)	Deadline for publishing is March 16, for publication in March 19 edition of Winnetka Current
Hold public hearing before Village Council and consider introduction of ordinance	April 7 Village Council meeting
Consider adoption of ordinance	April 21 Village Council meeting

Recommendation

1. Provide policy direction on proposed amendments to Personal Service Uses.
2. Provide policy direction on reclassification of educational, construction related, financial service and medical and related use groups from special to permitted uses.

Attachments

Attachment A – December 9, 2014 Agenda Packet
Attachment B – Table of Uses (Section 17.46.010 of VOW Code)
Attachment C – Proposed Amendments – Personal Service Uses

ATTACHMENT A

December 9, 2014 Agenda Packet

Agenda Item Executive Summary

Title: Special Use Permit Process

Presenter: Michael D'Onofrio, Director of Community Development

Agenda Date: 12/09/2014

Consent: ☐ YES ☑ NO

☐ Ordinance
☐ Resolution
☐ Bid Authorization/Award
☑ Policy Direction
☐ Informational Only

Item History:

None

Executive Summary:

As an outgrowth of the Urban Land Institute Technical Assistance Panel (ULI TAP), recommendations were made to streamline or revise existing regulations including the Special Use Permit (SUP) regulations and process. Additionally, in July 2014, the Village Council, when discussing a SUP for a clothing consignment store, asked Staff to provide recommendations on what changes it believes should be made to the SUP regulations. The Business Community Development Commission (BCDC), also in its review of the Overlay District, made a number of recommendations concerning Special Uses in the Overlay District. Finally, the Zoning Board of Appeals (ZBA), along with the Council, has suggested that the SUP process be streamlined. All these suggestions have culminated with the Village Attorney and Staff preparing a report compiling the information which the ULI, BCDC, ZBA and Village Council asked to be examined.

To assist the Council in conducting its review and analysis, the Village Attorney and Staff have identified and provided data on the issues related to SUP regulations and process. This report contains six sections identifying items associated with regulations and process and include the following:

I. Existing SUP regulations – identification of the uses allowed either by right, or as a SUP in the commercial zoning districts, as well as the current uses in those districts.
II. SUP applications from 2004 - 2014 – during the past ten years, 45 applications have been made for SUP; Staff has provided details and analysis of all of these applications.
III. SUP process – Staff has provided a Gantt chart which identifies the steps and associated time frames for each stage of the process.
IV. SUP process in other municipalities – the Village Attorney reviewed neighboring municipalities SUP processes.
V. Streamlining the SUP – the Village Attorney identified three alternatives that might be considered in changing the SUP process.
VI. Potential amendments to uses – Staff has presented possible amendments which could reclassify certain types of uses from SUP to permitted uses.

Recommendation:

1. Provide policy direction on streamlining the Special Use Permit process by considering joint meetings, streamlining review jurisdictions and SUP triggers.

2. Provide policy direction on proposed amendments to existing Special Uses including personal service, educational, construction related, financial service and medical and related uses.

Attachments:

Agenda Report
Attachment A – Table of Uses
Attachment B – C-2 Overlay District Special Uses
Attachment C – SUP Applications 2004 - 2014
Attachment D – VOW SUP Process Gantt Chart
Attachment E – Agenda Report, Retail Overlay District Regulations
Attachment F – Existing Uses & Size
Attachment G – Summary of Neighboring SUP Regulations

AGENDA REPORT

SUBJECT: Special Use Permit Process

PREPARED BY: Michael D'Onofrio, Director of Community Development
Peter Friedman, Village Attorney

DATE: December 3, 2014

Introduction

As an outgrowth of the Urban Land Institute Technical Assistance Panel (ULI TAP), recommendations were made to streamline or revise existing regulations including the Special Use Permit (SUP) regulations and process. Additionally, in July 2014, the Village Council, when discussing a SUP for a clothing consignment store, asked staff to provide recommendations on what changes it believes should be made to the SUP regulations. The Business Community Development Commission (BCDC), also in its review of the Overlay District, made a number of recommendations concerning Special Uses in the Overlay District. Finally, the Zoning Board of Appeals (ZBA), along with the Council, has suggested that the SUP process be streamlined. All these suggestions have culminated with the Village Attorney and Staff preparing a report compiling the information which the ULI, BCDC, ZBA and Village Council asked to be examined.

To assist the Council in conducting its review and analysis, the Village Attorney and Staff have identified and provided data on the issues related to SUP regulations and process. This report contains six sections identifying items associated with regulations and process and include the following:

I. Existing SUP regulations – identification of the uses allowed either by right, or as a SUP in the commercial zoning districts, as well as the current uses in those districts.
II. SUP applications from 2004 - 2014 – during the past ten years 45 applications have been made for SUP; Staff has provided details and analysis of all of these applications.
III. SUP process – Staff has provided a Gantt chart which identifies the steps and associated time frames for each stage of the process.
IV. SUP process in other municipalities – the Village Attorney reviewed what other neighboring municipalities SUP processes are.
V. Streamlining the SUP – the Village Attorney identifies three alternatives that might be considered in changing the SUP process.
VI. Potential amendments to uses – Staff have identified possible amendments which could reclassify certain types of uses from SUP to permitted uses.

I. Current SUP Regulations

In the Zoning Ordinance, Section 17.46.010 Table of Uses lists the uses allowed in the C-1, C-2 and Retail Overlay District (See Attachment A, Table of Uses). There are 145 uses listed in the table, including residential, personal service establishment, retail sales, food and beverage, financial, offices, medical, transportation, educational, governmental and recreational categories.

The 145 uses fall into one of three types: (1) P – Permitted Uses; (2) SU – Special Uses; and, (3) NO – Not Permitted. There are 69 Special Uses in the Table of Uses which are identified in Attachment B, C-2 Overlay District Special Uses. Additionally, there are three other columns of information. The first is annotated with a Y (yes) or N (no) identifying if there is currently this type of use in the Overlay District. If there is a Y in this column, then one of the two remaining columns will be marked with an "X" denoting whether it is an approved SUP, or allowed as a legal non-conforming use. A legal non-conforming use is a business that was in existence prior to the adoption of regulations making a Special Use. For example the BMO Bank at Elm St. and Green Bay Rd. was in operation before the property was put in the Overlay District.

In analyzing the data Staff determined the following:

- Of the total of 69 Special Uses allowed in the Overlay District, 18 of the uses currently exist in the district.
- The 18 types of uses include approximately 20-25 individual businesses. For example, there are several banks and health clubs in those individual types of uses.
- Approximately half of the uses have obtained a SUP and the other half are legal nonconforming uses.

II. SUP Applications 2004 – 2014

In order to gain a better understanding of the SUP process and regulations, historical perspective is important. From 2004 to 2014, a total of 45 SUP applications were made. This figure includes all SUP, whether they were for uses located in the Overlay District, required due to being located in residentially-zoned district, or the type of use that requires a SUP regardless of its location. (See Attachment C, SUP Applications 2004 – 2014).

There are several facts about these 45 SUP applications that need to be highlighted. First, of that total, 13 applications were either denied or withdrawn. Second, of the remaining 32 applications, they fall into one of four following categories:

1. *SUP required due to location in residentially zoned districts*. These uses fall under the category of public/quasi-public uses, in that they are associated with schools (including pre-school thru high school, both public and private), the Winnetka Park District and the Winnetka Community House. In the past ten years, 14 of these uses have been approved.

2. *SUP required for health club facilities*. In the past ten years, seven of these facilities have been approved.
3. *SUP required for uses in the Overlay District*. In the past ten years, six of these uses have been approved.
4. *SUP for other Uses not included above*. This includes SUP in Indian Hill, cell towers and a Planned Development. In the past ten years, four of these uses have been approved.

Before discussing the disposition of the applications which were approved, it should be noted that four of the 45 applications were denied outright and another nine were withdrawn.

Taking into account the case data described above several conclusions can be drawn:

- Of the 45 SUP applications made, almost 50% (22) were associated with public/quasi-public institutional uses that were located in residential districts.
- There were a total of 11 applications made for SUP in the Overlay District during the past ten years representing approximately 25% of all SUP applications. Of these 11, three, (two real estate offices and an "unspecified" Special Use) were denied. Two additional SUP applications were withdrawn and included a proposed private school and an "unspecified" Special Use. The remaining six applications for SUP's in the Overlay District were approved.
- There were seven SUP applications made for health club facilities. All seven of these applications were approved, comprising 16% of all the SUP applications filed.
- Four SUP applications were made for uses outside of the Overlay District, yet still required approval of a SUP, representing 9% of all SUP applications. These included a real estate office in Indian Hill (2 applications), a service station in Hubbard Woods and a cell tower, also in Hubbard Woods.
- If all the data described above is annualized, an average of 4.5 SUP applications are submitted likely as follows:
    - 1 SUP application will be for a use in the Overlay District
    - 2 SUP applications will be associated with public and quasi-public uses in residentially-zoned districts.
    - 1 SUP application will be for a health club
    - 0.5 SUP application will be for commercial uses in non-Overlay commercial districts, or planned developments.

III. <u>SUP Process</u>

The process for obtaining a SUP requires multiple reviews and approvals. Each SUP must be reviewed by the ZBA, Plan Commission and Village Council. In the case where there will be exterior improvements – new façade, landscaping, signage, etc. – the application must also be reviewed by the Design Review Board (DRB). Whereas there is no exact timeframe for approval of a SUP, the process at a minimum will take approximately 8 -9 weeks. Staff has drafted a chart reflecting the process steps and generally associated timeframes (Attachment D, VOW Special Use Process Gantt Chart).

IV. SUP Process in Other Municipalities

One of the issues raised by the Council and the ZBA was the SUP approval process itself, and specifically, how other municipalities process SUP applications. The Village Attorney subsequently surveyed Glencoe, Glenview, Highland Park, Kenilworth, Lake Forest, Northbrook, Northfield, and Wilmette. (See Attachment G, Summary of Neighboring SUP Regulations). The results show that in these communities (i) plan commissions and the zoning boards of appeals generally do not have overlapping jurisdictions and do not review the same petitions, and (ii) both zoning boards and plan commissions have jurisdiction over special use permits, but those jurisdictions are specifically set forth in the respective codes.

For example, in Glenview, Highland Park, Northbrook, and Northfield, it is the Plan Commission only that hears SUP applications. Even in those communities (Kenilworth and Lake Forest) where the Plan Commission and ZBA hear SUP applications, both bodies do not hear the same applications. In Kenilworth, the Plan Commission hears SUP in the business district, while the ZBA hears SUP in all other areas of the Village. In Lake Forest, the Plan Commission generally hears SUP for new developments and other applications in specifically identified zoning districts, while the ZBA considers SUP for existing developments and in any zoning district not specifically under the SUP jurisdiction of the Plan Commission.

These structures from neighboring communities differ significantly from the current SUP process set forth in the Winnetka Zoning Ordinance, pursuant to which both the ZBA and Plan Commission hear all SUP applications, regardless of the location of the proposed SUP and regardless of whether the proposed SUP is a new development or an existing establishment.

V. Streamlining the SUP Process

There are three general alternatives that the Council should consider if it desires to change the existing SUP process.

1. Joint Meetings.

There is a general perception that joint meetings of the ZBA and the Plan Commission are not authorized or proper under Illinois law. That is not correct. However, as explained below, even though they may be allowed, joint meetings are generally not recommended.

The key case on joint meetings is the Illinois Supreme Court's decision in *Klaeren v. Village of Lisle*, 202 Ill 2d 164, 781 N.E.2d 223 (2002). In Klaeren, landowners living adjacent to a proposed Meijer development challenged the procedure by which the Village of Lisle approved the development. Specifically, Lisle used the uncommon procedure of a joint hearing of its zoning board of appeals, plan commission and board of trustees to hear evidence on the requested annexation, annexation agreement, rezoning and special use permits. Over 500 people attended the public hearing. The mayor of Lisle presided at the hearing, allowing the petitioners to make a full presentation of their case but setting a two-minute time limit on all speakers from the audience – a limitation that prevented a citizen

group from making a prepared presentation on behalf of 2,000 residents who had signed a petition. The mayor also barred citizens from presenting poster board exhibits as evidence. Moreover, the mayor prohibited any of the citizens from cross-examining any of the petitioner's witnesses. The Village ultimately granted the requested relief and the residents sued.

Significantly, the residents did not challenge the substance of the Village's zoning decisions. Rather, the basis for their zoning challenge was that the public hearing process did not afford them an adequate opportunity to be heard. The trial court, appellate court and Supreme Court properly criticized the specific procedures that the Village employed at the hearing. However, none of these courts ruled that joint meetings are prohibited under Illinois law. They are not.

All that said, joint meetings are rarely utilized because of two key issues. First, joint meetings are by their nature ad hoc. The Winnetka Village Code does not set "regular" joint meetings of the ZBA and Plan Commission. Any joint meeting of these two bodies would have to be a special meeting, taking place on a night other than the regularly scheduled meeting time for one or both of these bodies. This would likely create significant scheduling issues given the total of 16 members that serve collectively on both bodies (9 members of the Plan Commission and 7 members of the ZBA).

Second, joint meetings are procedurally cumbersome. For each joint meeting, each body must provide public notice of its meeting. A roll call must be made of each body at the commencement of the meeting. A quorum of each body must be present (5 for the Plan Commission; 4 for the ZBA). Separate minutes must be kept for each body. A determination would have to be made of which member of which body would chair the joint meeting. And finally, each of the bodies may have to weigh or require different evidence or testimony because of the specific standards that may apply to their respective reviews.

2. Applicable Reviewing Bodies.

As the survey (Attachment G) demonstrates, it is a standard practice for municipalities to either assign one body to hear all SUP applications or, if plan commission and ZBA will both hear SUPs, to specifically designate the jurisdiction of each of various types of potential SUPs. Avoiding overlapping jurisdictions eliminates the need for two separate hearings and two separate reviews by two different lower bodies regarding the same application.

3. Reduction in SUP Triggers.

Without the need for structural changes to ZBA and Plan Commission jurisdictions or meeting protocols, the most straightforward method of addressing concerns regarding the SUP process is to evaluate and determine whether there are uses or activities that do not need to trigger the SUP process. The Council has the authority not only to remove a special use requirement, but also to add restrictions that would apply to permitted uses. These types of

amendments often provide the necessary protections for particular uses without necessitating a full-blown public hearing process. Obviously, the determination of whether to make these types of changes to the Zoning Code is a policy decision for the Council to make. Based on the data collected and the recommendations from the BCDC, the Council can evaluate the following uses to determine whether they should be subjected to the SUP public hearing process.

VI. Potential Amendments to Uses

One of the BCDC recommendations associated with the Overlay District was to allow the reclassification of certain types of uses from Special Uses to Permitted Uses. Specifically, it recommended that the uses which fall into one of the five following categories be permitted by right (currently allowed as SUP only), with the condition that size be limited to 3,000 s.f.

1. Personal Service Uses (includes fitness studios and personal training facilities)
2. Educational Uses
3. Construction-Related Uses (includes architects, interior design services and home builders)
4. Financial Service Uses (not including banks)
5. Medical and Related Uses

The BCDC's report to the Village Council identified recommended changes and the rationale behind them (See Attachment E, Agenda Report, Retail Overlay District Regulations).

As part of its review of this item with the BCDC, Staff put together an analysis of existing businesses that fall into theses five categories (See Attachment F, Existing Uses & Size). As summarized below, this data reveals that average size of these uses, by category, is significantly smaller than the 3,000 s.f. standard recommended by the BCDC. Furthermore, collectively the average size of all 52 identified uses totals only 1,528 s.f.

1. Personal Service Uses – 1,580 s.f.
2. Educational Uses – 1,790 s.f.
3. Construction-Related Uses – 1,750 s.f.
4. Financial Service Uses – 1,100 s.f.
5. Medical and Related Uses – 1,460 s.f.

After analyzing this data, Staff has several comments. First, with respect to Personal Service Uses, there is adequate data to conclude that Fitness Facilities (which fall under the category of Health Club), should be permitted by right, and not as a SUP. This recommendation is based on the fact that all seven SUP applications made for this use over the past 10 years have been approved. Second, as for the other four types of uses identified – educational, construction-related, financial services and medical – the pattern is not clear. The Village Council will need to weigh whether the remaining four types of uses, some or all, should be permitted by right at this time, or conduct additional review through the downtown master planning process. Finally, based on the data, Staff is recommending that if size limitations are imposed, for the proposed

five uses in the Overlay District that it be limited to a maximum of 2,500 s.f. This recommendation is based on the data which reveals that whether by individual use type, or all use types collectively, the size of the space ranges from 900 s.f. to 2,170 s.f. with the average size being 1,170 s.f.

Recommendation

1. Provide policy direction on streamlining the Special Use Permit process by considering joint meetings, streamlining review jurisdictions and SUP triggers.
2. Provide policy direction on proposed amendments to existing Special Uses including personal service, educational, construction related, financial service and medical and related uses.

Attachments

Attachment A – Table of Uses
Attachment B – C-2 Overlay District Special Uses
Attachment C – SUP Applications 2004 - 2014
Attachment D – VOW SUP Process Gantt Chart
Attachment E – Agenda Report, Retail Overlay District Regulations
Attachment F – Existing Uses & Size
Attachment G – Summary of Neighboring SUP Regulations

Winnetka, IL Village Code

Title 17 ZONING / Chapter 17.46 USE, LOT, SPACE, BULK AND YARD REGULATIONS FOR RETAIL COMMERCIAL DISTRICTS / Section 17.46.010 Table of uses.

Section 17.46.010 Table of uses.

Table of Uses	C-1 Limited Retail	C-2 General Retail	C-2 Retail Overlay
P = Permitted uses SU = Special uses NO = Not permitted			
A. RESIDENTIAL USES			
Dwelling unit above the ground floor in a commercial building	P	P	P
Dwelling unit at the ground floor, less than 50 feet from front street line	SU	NO	NO
Dwelling unit at the ground floor, 50 feet or more from front street line	SU	SU	SU

Table of Uses	C-1 Limited Retail	C-2 General Retail	C-2 Retail Overlay
B. PERSONAL SERVICES ESTABLISHMENTS and CUSTOM CRAFT USES			
Barber shop	P	P	P
Beauty salon or day spa, including nail salons, skin care and related services	P	P	P

Laundry and dry cleaning receiving store (processing not performed on premises)	P	P	P
Photography studio	P	P	P
Picture framing (retail only)	P	P	P
Printing shop with retail sales component, or mailing and related office services	P	P	P
Shoe or hat repair	P	P	P
Tailor shop or dressmaking establishment	P	P	P
Tanning salon	SU	SU	SU
Taxidermy shop	P	P	SU
Travel agency	P	P	SU
Upholstery shop and furniture repair/refinishing	P	P	SU
Weight loss clinic / diet center	SU	SU	SU
C. GENERAL RETAIL SALES and RELATED SERVICE USES			
Antique store	P	P	P
Apparel store	P	P	P
Apparel rental, not including cleaning	P	P	P
Appliance service, repair or sales	P	P	P
Art, craft, or hobby supply store	P	P	P
Art gallery or studio	P	P	P
Bath supply or accessory store	P	P	P
Bicycle sales service, repair or sales	P	P	P
Book store	P	P	P

Table of Uses	C-1 Limited Retail	C-2 General Retail	C-2 Retail Overlay
C. GENERAL RETAIL SALES and RELATED SERVICE USES (Cont'd)			
Cabinet sales establishment (not including cutting, assembly, and the like)	P	P	P
Camera and photo store	P	P	P
Card / stationery store	P	P	P
China, glassware, ceramic or flatware shop	P	P	P
Coin, stamp, precious metal or similar shop	P	P	P
Computer equipment sales and service	P	P	P
Department or variety store	P	P	P
Drug store	P	P	P
Electrical and household appliance sales and service	P	P	P
Electronics store	P	P	P
Fabric and sewing accessory store	P	P	P
Floor covering store	P	P	P
Florist shop, retail (no on-site greenhouse, outdoor storage, or related horticultural activities)	P	P	P
Furniture and home accessories store	P	P	P
Furniture and fur apparel shop (including storage / repair when incidental to retail)	P	P	P

Garden supply shop	P	P	P
Gift shop, specialty shop or novelty shop	P	P	P
Hardware store	P	P	P
Interior decorating (with retail inventory on display)	P	P	P
Interior decorating service (no retail inventory)	P	P	SU
Jewelry store	P	P	P
Leather goods store	P	P	P
Lighting and electrical equipment store (retail)	P	P	P
Luggage store	P	P	P

Table of Uses	**C-1 Limited Retail**	**C-2 General Retail**	**C-2 Retail Overlay**
C. GENERAL RETAIL SALES and RELATED SERVICE USES (Cont'd)			
Musical instrument store, including music lessons when incidental to retail	P	P	P
Newspaper or magazine store	P	P	P
Office supply store	P	P	P
Optical goods store	P	P	P
Paint and wall covering store	P	P	P
Pet shop and supplies (not including animal boarding or kennel services)	P	P	P
Pharmacy	P	P	P

Record, tape and video recording store	P	P	P
Resale shop, secondhand store or rummage shop	P	P	SU
Rummage collection and/or storage	SU	SU	SU
Shoe store	P	P	P
Sporting goods store	P	P	P
Tobacco shop	P	P	P
Toy store	P	P	P
Window covering, drapery or curtain store	P	P	P
D. PLANTS, ANIMALS AND RELATED USES			
Animal grooming establishments	P	P	P
Animal hospital or veterinary clinic (for care and treatment of domestic pets and animals only, and operated completely within a building (no boarding permitted, and cannot operate 24 hours)	P	P	SU
Wholesale florist, or commercial greenhouse	SU	SU	SU
E. FOOD PRODUCT USES			
Bakery, retail	P	P	P
Candy / confectionery shop	P	P	P
Convenience food store	SU	SU	SU

Table of Uses	**C-1 Limited Retail**	**C-2 General Retail**	**C-2 Retail Overlay**
E. FOOD AND BEVERAGE SERVICE USES (Cont'd)			

Grocery store	SU	P	P
Meat, fish or poultry market	P	P	P
Specialty food and beverage shop	P	P	P
F. FOOD AND BEVERAGE SERVICE USES			
Catering establishment with no retail or restaurant component	P	P	SU
Ice cream or frozen desert shop	P	P.	P
Restaurant, drive-in	SU	SU	SU
Restaurant, fast food	SU	SU	SU
Restaurant, standard	P	P	P
G. FINANCIAL USES			
Accounting, auditing and bookkeeping services	P	P	SU
Banks without drive-through facilities	SU	P	SU
Banks with drive-through facilities	SU	SU	SU
Credit union office	SU	P	SU
Financial counseling office	P	P	SU
Income tax service	P	P	SU
Insurance agents or brokers	P	P	SU
Loan or mortgage brokers	P	P	SU
Stock, commodity or security broker	P	P	SU
H. BUSINESS SERVICE USES			
Advertising agency offices	P	P	SU

Building maintenance service offices	P	P	SU
Business machine sales, service or rental	P	P	P
Employment agency	P	P	SU

Table of Uses	C-1 Limited Retail	C-2 General Retail	C-2 Retail Overlay
H. BUSINESS SERVICE USES (Cont'd)			
Printing shop (with no retail sales component)	P	P	SU
Stenographic and other temporary office employment service offices	P	P	SU
I. OFFICE AND PROFESSIONAL USES			
Business association office	P	P	SU
General offices	P	P	SU
Newspaper offices	P	P	SU
Professional offices, including architect, attorney, engineer	P	P	SU
Publishing offices	P	P	SU
Office of institution of religious, charitable or philanthropic nature	P	P	SU
Real estate offices	SU	P	SU
J. MEDICAL AND RELATED USES			
Acupuncture services	P	P	SU
Chiropractor's offices	P	P	SU

Dental office	P	P	SU
Dental laboratory	P	P	SU
Home health care provider's offices	P	P	SU
Medical offices	P	P	SU
Medical laboratory	P	P	SU
Offices for the fitting, sales and repair of hearing aids, prosthetic appliances and the like	P	P	P
Optical laboratory	P	P	SU
Psychiatrist's and psychologist's office or similar mental health counseling	P	P	SU

Table of Uses	**C-1 Limited Retail**	**C-2 General Retail**	**C-2 Retail Overlay**
K. TRANSPORTATION AND RELATED USES			
Automobile parts accessories store (retail)	P	P	P
Automobile, motorcycle, boat and marine sales and showroom (limited to indoor storage of display models)	SU	P	P
Automobile service station (including incidental repair and washing accessory to principal use) subject to being located a minimum of 200 feet from a church, or temple, library, community or parish house, or public or private school or kindergarten	SU	SU	SU
Motor vehicle battery and tire sale and service	SU	SU	SU
Parking lot	SU	SU	SU

Public garage (any building used for storage, parking, repair, and the like, but not including body and fender shop, and auto laundry, an automotive machine shop, a welding shop, and automobile repainting shop or a shop engaged in the repair or testing of engines)	SU	SU	SU
Railroad passenger station	SU	SU	SU
L. MATERIAL SUPPLY AND CONSTRUCTION USES			
Glass and mirror shop	P	P	P
Heating and air conditioning sales and service establishments	P	P	P
Heating and air conditioning service establishments	P	P	SU
Lighting and electrical sales and service establishments	P	P	P
Lighting and electrical service establishments	P	P	SU
Roofing sales and service establishments	P	P	P
Roofing service establishments	P	P	SU
Plumbing sales and service establishments	P	P	P
Plumbing services establishments	P	P	SU

Table of Uses	**C-1 Limited Retail**	**C-2 General Retail**	**C-2 Retail Overlay**
M. COMMUNICATION AND PUBLIC UTILITY USES			
Newspaper distribution agencies	P	P	SU

Newspaper home delivery center	NO	SU	SU
Public utility service store or collection office	P	P	SU
Telephone exchange	P	P	SU
N. GOVERNMENTAL USES			
Postal service pick up stations, retail	P	P	P
Postal service, distribution service	SU	SU	SU
Parks	SU	SU	SU
O. MISCELLANEOUS USES			
Drive-in or drive-through uses	SU	SU	SU
Equipment rental	P	P	SU
Fix-it shop	P	P	P
Funeral parlor and undertaking establishment	P	P	SU
Private open space	SU	SU	SU
P. CULTURAL, RECREATIONAL AND ENTERTAINMENT USES			
Bowling alley	NO	SU	SU
Health club	NO	SU	SU
Library or reading room	P	P	SU
Ticket agency (amusements)	P	P	P
Q. EDUCATIONAL USES			
Business or commercial school	P	P	SU
Dancing, music, or language academy	P	P	SU
Educational therapy and counseling service	P	P	SU

ATTACHMENT B

C-2 OVERLAY DISTRICT SPECIAL USES	In Overlay District	App'd as SUP	Non-Conforming
Dwelling unit (on ground floor, 50 ft. or more from front street line	Y	X	
Tanning salon	N		
Taxidermy shop	N		
Travel agency	Y		X
Upholstery shop and furniture repair/refinishing	Y		X
Weight loss clinic/diet center	N		
Interior decorating service (no retail inventory)	Y		X
Resale shop, secondhand store or rummage shop	Y	X	X
Rummage collection and/or storage	N		
Animal hospital or veterinary clinic	N		
Wholesale florist, or commercial green house	N		
Convenience food store	N		
Catering establishment with no retail or restaurant component	N		
Restaurant, drive-in	N		
Restaurant, fast food	N		
Accounting, auditing and bookkeeping services	N		
Banks without drive-through facilities	Y		X
Banks with drive-through facilities	Y	X	
Credit union office	N		
Financial counseling office	N		
Income tax service	N		
Insurance agents or brokers	Y		X
Loan or mortgage brokers	N		
Stock, commodity or security broker	N		
Advertising agency offices	N		
Building maintenance service offices	N		
Employment agency	N		
Printing shop (with no retail sales component)	N		
Stenographic and other temporary office employment service offices	N		
Business association office	N		
General offices	N		
Newspaper offices	N		
Professional offices, including architect, attorney, engineer	N		
Office of institution of religious, charitable or philanthropic nature	N		
Real estate offices	Y	X	X
Acupuncture services	N		
Chiropractor's offices	N		
Dental office	N		
Dental laboratory	N		
Home health care provider's offices	N		
Medical offices	N		
Medical laboratory	N		
Optical laboratory	N		
Psychiatrist's and psychologist's or similar mental health counseling	N		
Automobile service station	Y	X	
Motor vehicle battery and tire sale and service	N		
Parking lot	Y	X	
Public garage	N		
Railroad passenger station	Y		X
Heating and air conditioning service establishments	N		
Lighting and electrical service establishments	N		
Roofing service establishments	N		
Plumbing service establishments	Y	X	
Newspaper distribution agencies	N		
Newspaper home delivery center	N		
Public utility service store or collection office	N		
Telephone exchange	N		

C-2 OVERLAY DISTRICT SPECIAL USES	In Overlay District	App'd as SUP	Non-Conforming
Postal service distribution service	N		
Parks	Y		X
Drive-in or drive-through uses	N		
Equipment Rental	N		
Funeral parlor and undertaking establishment	N		
Private open space	N		
Bowling alley	N		
Health club	Y	X	
Library or reading room	Y		X
Business or commercial school	Y		X
Dancing, music, or language academy	Y		X
Educational therapy and counseling service	N		
TOTAL	**69 (18 Y & 51 N)**	**8**	**12**

08/11/2014

ATTACHMENT C

SUP APLICATIONS 2004 -2014

Applications denied

1. Jean Wright Real Estate, 559 Chestnut St.- Expansion of a real estate office
2. North Hermitage Building Trust, 906-908 Green Bay Rd. – Unspecified SUP
3. Coldwell Banker, 572 Lincoln Ave. – New real estate office
4. New Trier H.S., Duke Childs Field – Baseball netting

Applications withdrawn

1. Elm Street Metra Station, 754 Elm – Renovation of train station
2. Willow Wood Pre-School, 470 Maple – Playground renovations
3. Winnetka Park District, 939 Green Bay – Hubbard Woods shelter
4. Willow Wood Pre-School, 684 Oak – Playground renovations
5. North Hermitage Building Trust, 906-908 Green Bay Rd. – Unspecified SUP
6. French Institute – Spanish School, 503 Chestnut – New school
7. New Trier H.S., 385 Winnetka – School expansion
8. School District 36, Crow Island School – Parking lot expansion
9. School District 36, Greeley School – Playground renovations

It should be noted that of the 13 cases that were either denied, or withdrawn, four – Jean Wright Real Estate, Coldwell Banker, and North Hermitage Building Trust twice – were located in the Overlay District.

Factoring out the 13 cases that were denied or withdrawn, it leaves 32 SUP applications that were approved over the past 10 years. These cases can be broken down into four categories. The first and largest group is those uses that required a SUP due to the fact that they were uses located in residentially zoned districts. Furthermore, they fall under the category of public/quasi-public uses, in that they include uses associated with schools (including pre-school thru high school, both public and private), the Winnetka Park District and the Winnetka Community House. Following is the 14 approved SUP's that fall into this category:

1. Winnetka Park District, 490 Hibbard – Paddle tennis facility
2. Winnetka Community Nursery School, 800 Pine – Playground renovations
3. Winnetka Park District, Crow Island Woods – Park renovations
4. School District 36, Washburne School – School addition
5. School District 36, Greeley School – School addition
6. Winnetka Park District, 490 Hibbard – Expansion of paddle tennis facility
7. School District 36, Washburne School – School addition
8. Winnetka Park District, 1390 Willow – Service center building
9. Winnetka Park District, Indian Hill Park – Playground renovations
10. North Shore Country Day School, 310 Green Bay – School addition
11. Winnetka Park District, Village Green – Playground renovations
12. Winnetka Park District, 540 Hibbard – Tennis Center and Service Center improvements
13. Winnetka Park District, 540 Hibbard – Skokie Playfield improvements
14. Winnetka Community House, 620 Lincoln – Playground renovations.

The second category of uses includes health clubs. Health clubs are allowed as a Special Use anywhere in the C-2 Commercial District. In the past ten years, seven of these facilities have been approved and include the following:

1. Super Slow, 1013 Tower Ct.
2. Curves, 723 Elm
3. Fitness Together, 546 Lincoln
4. Pilates, 906-908 Green Bay
5. Spynergy, 813 Oak
6. Definition Fitness, 552-554 Lincoln
7. Exercise Coach, 854 Green Bay

The third category of uses is SUP's that were required due to being located in the Overlay District. Following is the list of the six approved SUP's which fall into this category.

1. North Shore School of Rock, 896 Green Bay – commercial music school
2. Absolute Equity, 910 Green Bay Rd – residential dwelling unit on first floor
3. Medical Pediatrics, 564 Lincoln - medical office
4. Packard Associates, 925-931 Green Bay – surface parking lot
5. Conlon Real Estate, 565 Lincoln – real estate office
6. KMK Consignment, 561½ Lincoln Ave – resale store

The fourth and final category of SUP's includes those that do not fall into one of the three previously listed categories, but still required approval of a SUP. This includes the following five cases:

1. AT&T, 874 Green Bay – Cell tower
2. New Trier Partners, Lincoln & Elm – Planned Development
3. @properties, 26-30 Green Bay – Real estate office in C-1 Commercial District
4. @properties, 26-30 Green Bay – Expansion of a real estate office in C-1 Commercial District
5. BP Amoco, 1025 Tower Rd. – Automobile service station

ATTACHMENT D

VOW Special Use Process Gantt Chart

Task ID	Task Name	Start	Finish	Duration (working days)
1	Applicant submits complete application	12/1/2014	12/10/2014	8d
2	Staff reviews application & prepares legal notice	12/11/2014	12/17/2014	5d
3	Publish legal notice in local newspaper	12/24/2014	12/24/2014	1d
4	Prepare agenda materials for first advisory board meeting; Zoning Board of Appeals	12/26/2014	1/5/2015	7d
5	If required, prepare agenda materials for Design Review Board	1/8/2015	1/15/2015	6d
6	Conduct first advisory board hearing: ZBA	1/12/2015	1/12/2015	1d
7	Prepare agenda materials for second advisory board hearing: Plan Commission	1/13/2015	1/21/2015	7d
8	Conduct Design Review Board meeting	1/15/2015	1/15/2015	1d
9	Conduct second advisory board hearing: PC	1/28/2015	1/28/2015	1d
10	Produce minutes of all applicable advisory board meetings	1/13/2015	2/18/2015	27d
11	Direct Village Attorney to draft ordinance	2/19/2015	2/25/2015	5d
12	Prepare Council agenda packet materials	2/19/2015	2/25/2015	5d
13	Publish meeting notice & Council agenda packet	2/26/2015	2/26/2015	1d
14	Village Council introduces ordinance	3/3/2015	3/3/2015	1d
15	Village Council adopts ordinance	3/17/2015	3/17/2015	1d

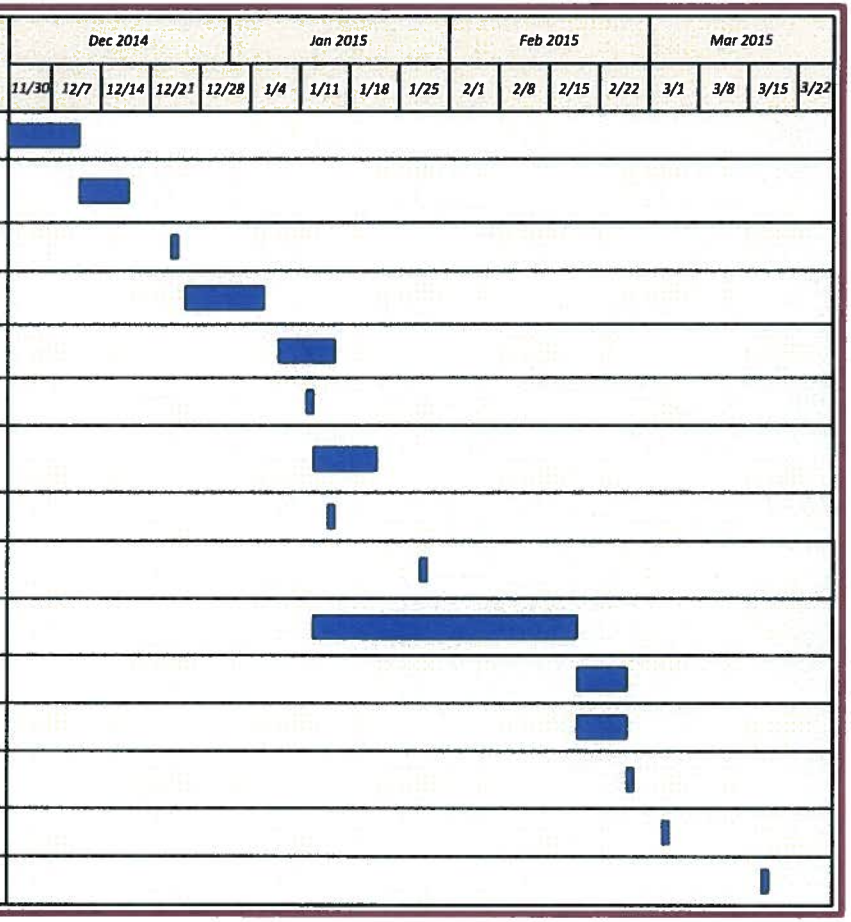

Supplemental Information:

- **Re #1:** Staff works with applicant during this time period to achieve a complete and acceptable application. The finish date here must be met for all other dates to be feasible.
- **Re #3:** The legal notice must not be more than 30 days nor less than 15 days before the hearing.
- **Re #4:** The first hearing is based on the next closest advisory board meeting that meets the legal notification. The PC meets on the 3rd Wednesday of each month. The ZBA meets the 2nd Monday of each month.
- **Re #5:** In cases where there are exterior improvements, the DRB will consider the Certificate of Appropriateness for the project. The DRB meets on the 3rd Thursday of each month.
- **Re #14/15:** The ordinance must be introduced and adopted as separate actions.

AGENDA REPORT

TO: Village Council

PREPARED BY: Michael D'Onofrio, Director of Community Development
Brian Norkus, Assistant Director of Community Development

SUBJECT: Retail Overlay District Regulations

DATE: April 3, 2014

Introduction

As part of the ULI TAP report it was recommended that one area to be examined was the Retail Overlay District (Overlay District). The TAP report recommended that the Village should consider revising or eliminating the Overlay District. This recommendation was made based on ULI's belief that: "The nature of successful retail today is a blend of shops and services, and Winnetka, with its high median income is ideally suited for it." As with the building height and parking regulations, the Village Council tasked the BCDC with reviewing the Overlay District.

The BCDC examination of the Overlay District focused on two components (1) the specific uses subject to the Special Use Permit process, and (2) the Overlay District boundaries. In conducting its review the BCDC began with the premises that both boundaries and uses are closely related and bear examination side-by-side, versus looking at each as separate subjects. For example, the extent to which Overlay District boundaries are contracted may reduce the need to liberalize certain uses. The inverse is also true, as liberalizing use limitations would suggest less aggressive modification to mapped Overlay District boundaries.

Background

The Overlay District, which includes significant portions of the Hubbard Woods, East and West Elm business districts, was established in the late 1980's. The desire to create such a district was largely a reaction to the proliferation non-retail uses, real estate offices in particular, in the commercial districts. The fear at that time was that the retail base of the Village would be eroded by the expansion of service related, non-retail uses in the core of the commercial district.

The goal of the Overlay District is best defined in the Purpose Statement of the C-2 Commercial Zoning District - Retail Overlay District – which states:

> Portions of the C-2 (General Retail) Commercial District shown in the shaded areas of the Official Village of Winnetka Zoning Map and referred to in this chapter as the C-2 Overlay District are subject to regulations that encourage retailing of comparison shopping goods and personal services compatible with

> such retailing on ground floor in order to encourage a clustering of such uses, to provide for a wide variety of retail shops and expose such shops to maximum foot traffic, while keeping such traffic in concentrated (yet well distinguished) channels throughout the district, and permitting as a special use other commercial uses only to the extent that they meet certain additional requirements.

The Overlay District remained unchanged from its inception in the late 1980's until 2009. In 2006 the BCDC initiated a review of the Overlay District based on concerns that parcels outside of the district might be prime redevelopment sites. As a result of the BCDC review and subsequent study by the Plan Commission, on May 5, 2009 the Village Council adopted Ordinance MC-4-2009 amending the Overlay District regulations. Following is a synopsis of the modifications made to the regulations.

- Reduced the restriction on first floor uses within the Overlay District, from 100 feet to 50 feet.
- Modifications were made to the use categories. This included eliminating use types no longer in existence (i.e. telegraph offices), clarifying or expanding existing uses (i.e. "Beauty Salon" use was expanded to include "… day spa, including nail salons, skin care and related services") and, adding a limited number of new uses (i.e. weight loss clinic/diet center, tanning salon, printing shop, convenience food store) .
- Expanded the district boundaries (banks at Elm and Green Bay, Amoco station, etc.).
- Contracted district boundaries (area around Oak and Chestnut).

BCDC review and recommendations

The BCDC in developing its recommendations felt a combined approach of making targeted map amendments with strategic revisions to use limitations was the most appropriate method of accomplishing the goals of the Overlay District. Beginning last December, the BCDC spent all or parts of its last five meetings discussing the Overlay District. Following are a series of recommendations being made by the BCDC. The first five recommendations are proposed modifications to the uses. The second set of recommendations includes proposed changes to the Overlay District boundaries.

PROPOSED USE MODIFICTIONS

1. **Personal Services Establishments** – Under Section 17.46.010.B of the Zoning Ordinance (Table of Use, Personal Service Establishments), uses such as fitness studios, weight loss clinic/diet center, personal training facilities, etc., are allowed only as Special Uses.

   Recommendation #1 – Allow fitness studio, weight loss clinic/diet center, personal training, or similar uses to be permitted uses and limit size to 3,000 s.f.

There are several factors behind the rationale for this recommendation. First, in recent years the trend has been that these types of uses have become popular and are being located in commercial districts. To that point, there are six of these types of facilities currently in operation in the Hubbard Woods and Elm Street business districts. Second, with the exception of one of the facilities (Spynergy), the other five have been approved under the Special Use process. Furthermore, dating back at least 12 years, no Special Use request for such a type of establishment has been denied. Third, these types of personal service establishments, if permitted by right, are consistent with one of the ULI recommendations which are that these types of uses will bring additional traffic into the business districts.

The rationale behind the 3,000 s.f. size limitation is threefold. First, the Zoning Ordinance has long allowed "complementary service businesses" by right, within the Overlay District. These originally included beauty salons and later extending that definition to include specific related categories, including skin care, nail salons and day spas. The BCDC believes the case can be made that the uses in the proposed change would be an extension of those types of complementary businesses. Second, the five existing fitness related facilities range in size from 980 to 2,170 s.f. and the BCDC believes that the 3,000 s.f. maximum would accommodate any of these uses, as well as allow for size flexibility for these types of uses in the future. At the same time the proposed maximum is still low enough so not to have a negative impact on parking.

It needs to be pointed out that even with the proposed recommendation a Special Use for the larger personal service establishments would be required. The rational here is that a larger facility could have a negative impact, in terms of the size of a facility, hours of operation, and/or parking demand.

2. **Educational Uses** – Under Section 17.46.010.Q of the Zoning Ordinance (Table of Uses, Educational Uses) educational therapy and counseling services are allowed as a Special Use.

   Recommendation #2 – Allow educational therapy and counseling services to be a permitted use and limit size to 3,000 s.f.

The BCDC rationale behind this recommendation has to do with the particular importance placed on education in the Village and surrounding communities, which in turn creates a demand for these types of services. Second, there are three such facilities currently in the Overlay District and range in size from 1,300 to 2,200 s.f. all of which bring traffic into the commercial areas. Finally, as is the case with *Recommendation #1,* the 3,000 s.f. limitation would allow for size flexibility in the future either for moderate expansion of existing facilities, or new facilities.

3. **Construction Related Uses** – Under Section 17.46.010.C, I & L of the Zoning Ordinance, (Table of Uses, General Retail Sales & Related Service Uses, Office and Professional Uses, Material Supply and Construction Uses) certain construction related uses are permitted, with certain conditions. For example, construction uses such as HVAC, electrical, roofing and plumbing businesses are permitted by right, as long as there is a "sales" component to the business. The same goes for interior decorating businesses. However, architects, landscape architects and home builders are either not permitted at all, or allowed only as a Special Use.

   Recommendation #3 – Allow architects, interior design services (without retail merchandise) and home builders, as a permitted use and limit size to 3,000 s.f.

   The rationale behind this recommendation is based on several factors. First, there are currently 12 businesses in operation that fall under construction related uses, four of which are in the Overlay District. Second, the current required sales component for a number of the uses is somewhat limited in that it does not provide any standard as to the amount of sales. Third, these types of uses will generate traffic in the commercial districts in that they represent the type of activity and services residents and consumers desire in the village. Finally, as is the case with *Recommendation #1*, the 3,000 s.f. limitation would allow for size flexibility in the future for these types of uses.

4. **Financial Services** – Under Section 17.46.010.G of the Zoning Ordinance (Table of Uses, Financial Uses), financial service uses are only allowed in the Overlay District as Special Use.

   Recommendation #4 – Allow the following financial services uses as permitted uses – accounting and bookkeeping, financial planning, income tax services, insurance sales, loan or mortgage brokers, and stock/commodity/security brokers – and limit size to 3,000 s.f.

   The rationale behind this recommendation was that these are the types of uses that will generate traffic in the commercial districts. Second, there are currently 11 financial service businesses, excluding banks, in the three commercial districts and range in size from 500 to 3,000 s.f. Again the BCDC believes that these types of uses will generate activity and traffic that is beneficial to the commercial district.

   This recommendation would still require approval of a Special Use for any banks.

5. **Medical and Related Uses** – Under Section 17.46.010.J of the Zoning Ordinance (Table of Uses, Medical and Related Uses), medical and dental offices are only allowed as Special Uses in the Overlay District.

   Recommendation #5 – Allow medical and dental offices as a permitted use and limit size to 3,000 s.f.

   The primary rationale behind this recommendation is that medical and dental offices would bring additional traffic to the commercial districts. This change would also impose a maximum size limit of 3,000 s.f. This limitation is being recommended in that it is consistent with the existing medical and dental offices which range in size from 400 to 3,000 s.f. Additionally, by limiting the size, it will limit the impact on parking. Furthermore, if larger medical or dental clinics want to locate in the Overlay District, they would have to go thru the Special Use process.

Summary of Proposed Use Modifications

In making its recommendations related to use modifications the BCDC took into consideration several factors. First, as recommended by the ULI, it was critical to promote uses that would generate activity and traffic that would be beneficial to all businesses in all the business districts. Second, it was important to understand today's retail and service markets, yet creates an environment where the next generation of these types of next generation uses can be accommodated in the Village's business districts. Finally, the BCDC had to balance the demands of tomorrow's uses with existing businesses that have created the business environment that is so unique to Winnetka.

PROPOSED BOUNDARY MODIFICATIONS

Along with the recommendations related to uses, the BCDC also examined the Overlay District boundaries. In arriving at its recommended boundary changes the BCDC considered a number of areas where the boundaries might be amended. This included 16 specific areas in the Hubbard Woods and Elm Street business districts. These areas are identified on the attached Maps #1 and #2. As a result of its review and discussion the BCDC has recommended a number of changes to the boundaries which are summarized below by commercial district, as well as identified graphically on Maps #3 and #4.

Hubbard Woods

1. *Remove 1043 – 1049 Tower Rd.* Existing businesses Girlfriends (nail salon) and North Shore Shoe Clinic. These properties were added to the Overlay District in 2009 with adoption of Ord. MC-4-2009. This area includes approximately 1,600 s.f. in the Overlay District. The rationale in recommending removal is that this property does not front on Green Bay Rd and the pedestrian traffic does not wrap around from Green Bay Rd. on to Tower Rd.

2. *Remove 1046 – 1062 Gage St.* (Gage St., east of Green Bay Rd.). Existing businesses include Excellent Cleaners, Prufrock Floral, Bellows Shop, Once Upon a Bagel, Stitches and Willow Boutique. This area includes approximately 3,700 s.f. This area is recommended for removal because it does not front along Green Bay Rd and therefore pedestrian traffic does not wrap around from Green Bay Rd. on to Gage St. Finally, this area is not visible from Green Bay Rd.

East Elm

1. *Remove 511 – 515 Lincoln Ave.* This includes two currently vacant buildings, the former Fell clothing store, and former Marian Michael clothing store. This area contains approximately 3,400 of s.f. in the Overlay District. This area is being recommended for removal due to it being located south of Elm St. and the fact that there is no retail across the street (railroad cut is along west side of Elm St.).
2. *Remove 554 – 572 Lincoln Ave.* (west side of Lincoln Ave north of Little Ricky's). Existing businesses in this area include Homemade Pizza, Spa Nail City, Oui Madame, Your Loss Your Gain, TJ Cullen Jewelers, Anthony Perry Designs and Round Table Books. This area contains approximately 7,500 s.f. in the Overlay District. The BCDC recommended removal of this area due to a significant vacancy rate in the East Elm District and one solution to reducing it, would be to open it up to non-retail related uses.
3. *Remove 545 – 551 Lincoln Ave* (east side of Lincoln Ave. north of Café Aroma). Existing businesses in the area include Mark Beard LTD, former D's Haute Dogs, Orrington Jewelers, Optique, Flee Bags, Sara Campbell, Conlon Real Estate, J. McLaughlin, M. Stefanich Antiques and Donald Stuart. This area contains approximately 4,400 s.f. in the Overlay District. The same rationale for removal identified for the west side of Lincoln Ave. holds true here.

West Elm

1. *Remove 809 - 821 and 810 Chestnut Court.* This includes both the north and south sides of Chestnut Court. Existing businesses include Bella Day Spa, Hair Couture, as well as portions of the former Gray women's clothing store and Lakeside Foods. These two areas contain approximately 6,700 s.f. in the Overlay District. The rationale in recommending removal of this area is that first there is limited vehicular traffic in the area and with the exception of a portion of Lakeside Foods, it is populated with non-retail uses.
2. *Remove 844 Spruce St and 566 Chestnut St.* This includes the south side of Spruce St. 50 feet west of Chestnut St to the west boundary of the Overlay District – 852 Spruce St. Existing business in this area include Savocchi Glass and Glenn Klauke CPA. Also included is the 1,300 s.f. northwest corner of the Laundry Mall. In total this area contains contain approximately 3,500 s.f in the Overlay District. The BCDC recommended removal of this area, first due to the

fact that there is limited pedestrian traffic that wraps around Chestnut St. on to Spruce Street. Second, there is no retail frontage across the street along the north side of Spruce St.

Summary of Recommended Boundary Changes

Overall the BCDC examined 16 areas, in the three business districts, that it thought might be candidates for removal from the Overlay District. At the conclusion of its review it is recommending that seven areas be taken out of the Overlay District. The areas include both small geographic areas, such as 1043 – 1049 Tower Rd (1,600 s.f.), and larger parcels like both sides of Lincoln Ave., north of Elm St. (11,900 s.f.). Its rationale for removal includes factors such as creating pedestrian traffic, proximity to other retail, and vacancy rates. All told, the BCDC is recommending that 30,800 s.f. be removed from the Overlay District. This represents a reduction of 9.5% reduction in the overall size of the Overlay District.

Recommendation:

(1) Provide policy direction on the BCDC's recommendations concerning the Retail Overlay District uses and boundaries;

(2) Consider referring some, or all, of the BCDC's recommendations to the Plan Commission to evaluate for consistency with the Plan Commission's land use goals and objectives, including the 2020 Comprehensive Plan.

ATTACHMENT F

EXISTING USES

03/31/2014

Fitness Facilities**	District	Size (s.f.)
Athletico*	HW	2,170
Exercise Coach*	HW	2,170
Slow Movement*	HW	1,300
Fitness Together	EE	1,760
Definition Fitness*	EE	1,100
Spynergy*	WE	980
Total Square Footage		**9,480**
Ave. Size		***1,580***

Educational	District	Size
Adams School of Driving*	HW	1,855
Christian Science Reading Room	WE	1,320
French Institute*	WE	2,200
Total Square Footage		**5,375**
Ave. Size		***1,790***

Construction Related	District	Size
Robbins Architecture*	HW	600
Benvenutie & Stein	HW	1,500
Adamczyk	HW	900
VJ Killian	HW	2,300
A Perry Design & Build	EE	1,270
Bratchi Plumbing*	WE	2,500
H. Gary Frank Architecture*	WE	900
Absolute Architecture*	HW	1,900
Susan Isono Design*	HW	500
North Shore Builders*	HW	6,000
Jeannie Balsm Inc.*	HW	1,600
Liaison Studio*	WE	530
Total Square Footage		**20,500**
Ave. Size		***1,710***

*Outside the Overlay District

** Allowed as a Special Use only

Financial Services	**District**	**Size**
Bank of America*	HW	5,000
Private Bank	HW	3,600
No. Shore Comm. Bank/Wintrust Wealth Mgmt.*	EE	7,800
Toft Investments*	EE	555
Baird*	WE	3,500
Chase Bank	WE	15,000
BMO Harris	WE	31,350
CitiBank	WE	2,260
Howard Waitzman CPA, Capial Financial Group, Pilot Assessment, Ender Capital, Greespire Capital, Raymond James, First Benefits, GJ Dalen Commod.*	WE	3,500
Charles Schwab*	WE	3,540
Glen Klauke CPA*	WE	480
Chase Bank*	WE	2,200
Archambault & Assoc. CPA*	WE	500
Total Square Footage		**79,285**
Ave. Size (Non-banks ave. size is 1,100 s.f.)		***6,100***

Medical Office	**District**	**Size**
M.Waldon LCSW*	HW	285
Doctors Offices (914 GB Rd)*	HW	450
Hubbard Woods Dental Group*	HW	4,250
Dr. Scott DDS*	HW	1,200
McAurther Dentist*	HW	1,530
Dr. Robt. Fulanvoich*	EE	385
Winnetka Dental Clinic*	EE	800
Dr. R. Franzia*	EE	3,065
S. Clark, MD*	EE	600
Elm St. Pediatrics*	EE	2,850
J. Parks, MD*	EE	555
Medial Office (545 Lincoln)*	EE	555
Medial Office (545 Lincoln)*	EE	555
M. Gaynor DDS*	EE	650
Stone & Skowron DDS*	EE	1,300
A to Z Chiropractic*	EE	650
Dr. Ford DDS*	EE	2,775
City Kids Dental North Shore*	EE	2,775
465 Chestnut (former Dr. Warga DDS)*	WE	2,445
K. Barth Denstist*	WE	1,845
Alexander Oral Surgery*	WE	1,525
North Grove Internal Medicine*	WE	1,050
Total Square Footage		**32,095**
Ave. Size		***1,460***

*Outside the Overlay District

ATTACHMENT G

SUMMARY OF NEIGHBORING SUP REGULATIONS

	PC and ZBA Hold Hearing on Same Relief?	Which Body Hears SUP?
Glencoe	No	Zoning Commission (different than PC)
Glenview	No	Plan Commission
Highland Park	No	Plan Commission
Kenilworth	No. Plan Commission and Architectural Commission both have role in reviewing PUDs. Plan Commission holds hearing, and Architectural Commission reviews application.	Both Plan Commission and Zoning Board of Apeals hear SUPs in different circumstances, but jurisdiction does not overlap (ZBA hears SUPs in all districts other than business; PC hears SUPs in business districts).
Lake Forest	No - both hear SUP applications, but jurisdiction does not overlap.	Both Plan Commission and Zoning Board of Appeals hear SUPs in different circumstances, but jurisdiction does not overlap (PC: new developments and certain zoning districts; ZBA: existing developments not including zoning districts over which PC has SUP jurisdiction.
Northbrook	No	PC
Northfield	No	PC
Wilmette	No. Both have jurisdiction over text and map amendments, but Village Board refers each matter to one body or the other.	ZBA

ATTACHMENT B

Table of Uses

ATTACHMENT B – Table of Uses

Winnetka, IL Village Code

Section 17.46.010 Table of uses.

Table of Uses	C-1 Limited Retail	C-2 General Retail	C-2 Retail Overlay
P = Permitted uses SU = Special uses NO = Not permitted			
A. RESIDENTIAL USES			
Dwelling unit above the ground floor in a commercial building	P	P	P
Dwelling unit at the ground floor, less than 50 feet from front street line	SU	NO	NO
Dwelling unit at the ground floor, 50 feet or more from front street line	SU	SU	SU

Table of Uses	C-1 Limited Retail	C-2 General Retail	C-2 Retail Overlay
B. PERSONAL SERVICES ESTABLISHMENTS and CUSTOM CRAFT USES			
Barber shop	P	P	P
Beauty salon or day spa, including nail salons, skin care and related services	P	P	P
Laundry and dry cleaning receiving store (processing not performed on premises)	P	P	P
Photography studio	P	P	P
Picture framing (retail only)	P	P	P
Printing shop with retail sales component, or mailing and related office services	P	P	P
Shoe or hat repair	P	P	P
Tailor shop or dressmaking establishment	P	P	P
Tanning salon	SU	SU	SU
Taxidermy shop	P	P	SU
Travel agency	P	P	SU
Upholstery shop and furniture repair/refinishing	P	P	SU

Weight loss clinic / diet center	SU	SU	SU
C. GENERAL RETAIL SALES and RELATED SERVICE USES			
Antique store	P	P	P
Apparel store	P	P	P
Apparel rental, not including cleaning	P	P	P
Appliance service, repair or sales	P	P	P
Art, craft, or hobby supply store	P	P	P
Art gallery or studio	P	P	P
Bath supply or accessory store	P	P	P
Bicycle sales service, repair or sales	P	P	P
Book store	P	P	P

Table of Uses	C-1 Limited Retail	C-2 General Retail	C-2 Retail Overlay
C. GENERAL RETAIL SALES and RELATED SERVICE USES (Cont'd)			
Cabinet sales establishment (not including cutting, assembly, and the like)	P	P	P
Camera and photo store	P	P	P
Card / stationery store	P	P	P
China, glassware, ceramic or flatware shop	P	P	P
Coin, stamp, precious metal or similar shop	P	P	P
Computer equipment sales and service	P	P	P
Department or variety store	P	P	P
Drug store	P	P	P
Electrical and household appliance sales and service	P	P	P
Electronics store	P	P	P
Fabric and sewing accessory store	P	P	P
Floor covering store	P	P	P
Florist shop, retail (no on-site greenhouse, outdoor storage, or related horticultural activities)	P	P	P
Furniture and home accessories store	P	P	P
Furniture and fur apparel shop (including storage / repair when incidental to retail)	P	P	P
Garden supply shop	P	P	P
Gift shop, specialty shop or novelty shop	P	P	P
Hardware store	P	P	P

Interior decorating (with retail inventory on display)	P	P	P
Interior decorating service (no retail inventory)	P	P	SU
Jewelry store	P	P	P
Leather goods store	P	P	P
Lighting and electrical equipment store (retail)	P	P	P
Luggage store	P	P	P

Table of Uses	C-1 Limited Retail	C-2 General Retail	C-2 Retail Overlay
C. GENERAL RETAIL SALES and RELATED SERVICE USES (Cont'd)			
Musical instrument store, including music lessons when incidental to retail	P	P	P
Newspaper or magazine store	P	P	P
Office supply store	P	P	P
Optical goods store	P	P	P
Paint and wall covering store	P	P	P
Pet shop and supplies (not including animal boarding or kennel services)	P	P	P
Pharmacy	P	P	P
Record, tape and video recording store	P	P	P
Resale shop, secondhand store or rummage shop	P	P	SU
Rummage collection and/or storage	SU	SU	SU
Shoe store	P	P	P
Sporting goods store	P	P	P
Tobacco shop	P	P	P
Toy store	P	P	P
Window covering, drapery or curtain store	P	P	P
D. PLANTS, ANIMALS AND RELATED USES			
Animal grooming establishments	P	P	P
Animal hospital or veterinary clinic (for care and treatment of domestic pets and animals only, and operated completely within a building (no boarding permitted, and cannot operate 24 hours)	P	P	SU
Wholesale florist, or commercial greenhouse	SU	SU	SU
E. FOOD PRODUCT USES			

Bakery, retail	P	P	P
Candy / confectionery shop	P	P	P
Convenience food store	SU	SU	SU

Table of Uses	C-1 Limited Retail	C-2 General Retail	C-2 Retail Overlay
E. FOOD AND BEVERAGE SERVICE USES (Cont'd)			
Grocery store	SU	P	P
Meat, fish or poultry market	P	P	P
Specialty food and beverage shop	P	P	P
F. FOOD AND BEVERAGE SERVICE USES			
Catering establishment with no retail or restaurant component	P	P	SU
Ice cream or frozen desert shop	P	P	P
Restaurant, drive-in	SU	SU	SU
Restaurant, fast food	SU	SU	SU
Restaurant, standard	P	P	P
G. FINANCIAL USES			
Accounting, auditing and bookkeeping services	P	P	SU
Banks without drive-through facilities	SU	P	SU
Banks with drive-through facilities	SU	SU	SU
Credit union office	SU	P	SU
Financial counseling office	P	P	SU
Income tax service	P	P	SU
Insurance agents or brokers	P	P	SU
Loan or mortgage brokers	P	P	SU
Stock, commodity or security broker	P	P	SU
H. BUSINESS SERVICE USES			
Advertising agency offices	P	P	SU
Building maintenance service offices	P	P	SU
Business machine sales, service or rental	P	P	P
Employment agency	P	P	SU

Table of Uses	C-1 Limited Retail	C-2 General Retail	C-2 Retail Overlay

H. BUSINESS SERVICE USES (Cont'd)			
Printing shop (with no retail sales component)	P	P	SU
Stenographic and other temporary office employment service offices	P	P	SU
I. OFFICE AND PROFESSIONAL USES			
Business association office	P	P	SU
General offices	P	P	SU
Newspaper offices	P	P	SU
Professional offices, including architect, attorney, engineer	P	P	SU
Publishing offices	P	P	SU
Office of institution of religious, charitable or philanthropic nature	P	P	SU
Real estate offices	SU	P	SU
J. MEDICAL AND RELATED USES			
Acupuncture services	P	P	SU
Chiropractor's offices	P	P	SU
Dental office	P	P	SU
Dental laboratory	P	P	SU
Home health care provider's offices	P	P	SU
Medical offices	P	P	SU
Medical laboratory	P	P	SU
Offices for the fitting, sales and repair of hearing aids, prosthetic appliances and the like	P	P	P
Optical laboratory	P	P	SU
Psychiatrist's and psychologist's office or similar mental health counseling	P	P	SU

Table of Uses	C-1 Limited Retail	C-2 General Retail	C-2 Retail Overlay
K. TRANSPORTATION AND RELATED USES			
Automobile parts accessories store (retail)	P	P	P
Automobile, motorcycle, boat and marine sales and showroom (limited to indoor storage of display models)	SU	P	P
	SU	SU	SU

Automobile service station (including incidental repair and washing accessory to principal use) subject to being located a minimum of 200 feet from a church, or temple, library, community or parish house, or public or private school or kindergarten			
Motor vehicle battery and tire sale and service	SU	SU	SU
Parking lot	SU	SU	SU
Public garage (any building used for storage, parking, repair, and the like, but not including body and fender shop, and auto laundry, an automotive machine shop, a welding shop, and automobile repainting shop or a shop engaged in the repair or testing of engines)	SU	SU	SU
Railroad passenger station	SU	SU	SU
L. MATERIAL SUPPLY AND CONSTRUCTION USES			
Glass and mirror shop	P	P	P
Heating and air conditioning sales and service establishments	P	P	P
Heating and air conditioning service establishments	P	P	SU
Lighting and electrical sales and service establishments	P	P	P
Lighting and electrical service establishments	P	P	SU
Roofing sales and service establishments	P	P	P
Roofing service establishments	P	P	SU
Plumbing sales and service establishments	P	P	P
Plumbing services establishments	P	P	SU

Table of Uses	C-1 Limited Retail	C-2 General Retail	C-2 Retail Overlay
M. COMMUNICATION AND PUBLIC UTILITY USES			
Newspaper distribution agencies	P	P	SU
Newspaper home delivery center	NO	SU	SU
Public utility service store or collection office	P	P	SU
Telephone exchange	P	P	SU
N. GOVERNMENTAL USES			
Postal service pick up stations, retail	P	P	P
Postal service, distribution service	SU	SU	SU
Parks	SU	SU	SU

O. MISCELLANEOUS USES			
Drive-in or drive-through uses	SU	SU	SU
Equipment rental	P	P	SU
Fix-it shop	P	P	P
Funeral parlor and undertaking establishment	P	P	SU
Private open space	SU	SU	SU
P. CULTURAL, RECREATIONAL AND ENTERTAINMENT USES			
Bowling alley	NO	SU	SU
Health club	NO	SU	SU
Library or reading room	P	P	SU
Ticket agency (amusements)	P	P	P
Q. EDUCATIONAL USES			
Business or commercial school	P	P	SU
Dancing, music, or language academy	P	P	SU
Educational therapy and counseling service	P	P	SU

(MC-4-2009, Added, 05/05/2009)

ATTACHEMENT C

Proposed Amendments – Personal Service Uses

ATTACHMENT C – Section 17.46.010.B&P, Table of Use

	C-1	C-2	C-2 Retail Overlay
B. Personal Service Establishments and Custom Craft uses			
Barber shop	P	P	P
Beauty salon or day spa, including nail salons, skin care and related services	P	P	P
Laundry and dry cleaning receiving store (processing not performed on premises)	P	P	P
Photography studio	P	P	P
Picture framing (retail only)	P	P	P
Printing shop with retail sales component, or mailing and related office services	P	P	P
Shoe or hat repair	P	P	P
Tailor shop or dressmaking establishment	P	P	P
Tanning salon	SU	SU	SU
Taxidermy shop	P	P	SU
Travel agency	P	P	SU
Upholstery shop and furniture repair/refinishing	P	P	SU
Weight loss clinic / diet center	SU	SU	SU
Personal fitness services, including health clubs, fitness/exercise/weight loss clinics, yoga/dance/martial arts studios, and similar facilities			
• Less than or equal to 2,500 s.f. gross floor area	P	P	P
• Greater than 2,500 sq.ft. gross floor area	NO	SU	SU
P. Cultural, Recreational and Entertainment uses			
Bowling Alley	NO	SU	SU
~~Health Club~~	~~NO~~	~~SU~~	~~SU~~
Library or reading room	P	P	SU
Ticket agency (amusements)	P	P	P