Village of Winnetka
Community Development
510 Green Bay Rd.
Winnetka IL 60093

ADDITION – SINGLE FAMILY HOME CHECKLIST

Required Application Forms:

- Building Permit Application
- Trade Specific Work Form
- Contractors of Record Form (if known)
- Zoning Calculation Worksheets

Required Additional Documents:

- One (1) current Plat of Survey (to scale) not more than 5 years old
- Six (6) complete sets of Architectural plans (two sealed & signed)
- Five (5) complete sets of Civil Engineer plans
- Two (2) copies tree protection plan

Additional items May Be Required Depending on Project Scope:

- Demolition/Construction Recycling Plan (Step 1)
  - New structures larger than 2,000 sq. ft.
  - Renovations of existing structures in excess of 10,000 sq.ft
  - Demolition of area in excess of 1,500 sq. ft.
- Tree Removal Application (if applicable)

Adopted Codes to Note on Cover Page of Plans:

- International Residential Code for One and Two-Family Dwellings, 2015 Edition w/ appendix J (existing buildings)
- International Property Maintenance Code, 2015 Edition
- International Mechanical Code, 2015 Edition
- International Fuel Gas Code, 2015 Edition
- State of Illinois Plumbing Code, 2014 Edition
- National Electrical Code, NFPA 70, 2014 Edition
- International Fire Code, 2015 Edition
- NFPA 101 Life Safety Code, 2015 Edition
- NFPA Publication 13, 13R, 13D, 72, 2016 Edition
- International Energy Conservation Code 2018 Edition with the Illinois Amendments
- Village of Winnetka Building Code Amendments, August 1, 2019

Village of Winnetka
Community Development
510 Green Bay Rd.
Winnetka IL 60093

Items Requiring a Separate Permit Submittal:

- Generator
- Pool
- Fence
- Irrigation System
- Elevator

Village of Winnetka
Community Development
510 Green Bay Rd.
Winnetka IL 60093
(847) 716-3520

Building Permit Application

Permit #:_____ Date Received:_____

Permit Address_____ Winnetka, IL 60093

Description of Work _____

Estimated Construction Cost $ _____ (required)

CONSTRUCTION COST includes cost of material and labor; we may request submittal of a signed contract. The applicant hereby certifies that the total value of construction as stated above is an accurate and truthful estimate of the total value of all labor and materials for the new construction or improvement, including all finish work, painting, roofing, electrical, plumbing, HVAC, paving as well as any general contractor's fee. The general contractor's fee shall be included even if the owner and general contractor are the same.

Property Owner Information

Name _____

Address_____City_____ State_____

Daytime Phone_____Email_____

Primary Contact *(Note: all correspondence will be with the primary contact)*

Name_____Phone _____

Address_____City_____State_____Zip_____

Email_____

Architect's Information ❒ Not Applicable

Name_____Phone _____

Address_____City_____State_____Zip_____

Email_____

General Contractor's Information

Name_____Phone _____

Address_____City_____State_____Zip_____

Email_____

Village of Winnetka
Community Development
510 Green Bay Rd.
Winnetka IL 60093
(847) 716-3520

Submittal Requirements:

Please refer to the appropriate checklist for your particular type of permit work for application submittal requirements. All items identified on the worksheet(s) must be submitted with this application form in order for the application to be deemed complete.

Disclosure & Signatures:

The information submitted in this Building Permit Application may be used by the Village of Winnetka and/or any of its contractors or consultants. By signing below you certify that:

- *the information and exhibits herewith are true and correct;*
- *you are the owner of record of the named property, the proposed work is authorized and that the registered professional or contractor submitting the application is authorized to do so;*
- *you agree to conform to all applicable laws, statutes, ordinances, and codes of this jurisdiction, including those adopted by reference; and*
- *if the permit sought is approved, the permit work will be completed in accordance with the Village Codes and within the scope of work described in the application and the approved construction documents*

Application for a permit shall constitute the owner's consent to all inspections of the permit work that may be required pursuant to the Village Codes and to the right of all building officers to enter onto the premises during reasonable hours to conduct such inspections.

Signature of Property Owner: _____*Date:* _____

Print Name: _____

Signature of Owner's Authorized Designee: _____*Date:* _____

(Must attach Designee Form)

Print Name: _____

Relationship to Property Owner: _____

Village of Winnetka
Community Development
510 Green Bay Rd.
Winnetka IL 60093

PLUMBING/ELECTRIC/MECHANICAL

PERMIT FEE WORKSHEET

(Must be submitted with the Application for Building permit)

PROJECT ADDRESS: _____

DESCRIPTION OF PROJECT: _____

PLUMBING

○ Base fee up to five (5) fixtures		$70.00	= $70.00
○ Plus $10 each additional fixture	_____ Quantity	$10.00 per fixture	= $ _____

WATER SERVICE UPGRADE

Fee includes—making tab, tapping sleeve, corporation stop, curb stop and box& inspection (Meter fee additional)

○ Meter 1”	$625.00
○ Meter 2”	$990.00
○ New 1 ½” service (tap/main)	$852.00
○ New 2” service (tap/main)	$960.00
○ Larger	Please Call
○ Right-of-Way opening	$125.00

IRRIGATION SYSTEM

○ Base fee		$80.00	= $80.00
○ Plus $.90 per sprinkler head	_____ Quantity	$.90 each	= $ _____

SEWER (SANITARY OR STORM)

○ New/repair sanitary or storm – each	$150.00
○ Right-of-Way opening	$125.00
○ Alteration (add cleanout, sump pump, etc.)	$150.00

Village of Winnetka
Community Development
510 Green Bay Rd.
Winnetka IL 60093

MECHANICAL / HVAC

○ Base fee		$70.00	= $70.00
○ Plus $90 per new or replacement system	_____ Quantity	$90.00	= $ _____
○ Plus $100 per new or replacement roof-top	_____ Quantity	$100.00	= $ _____
○ Plus $100 8-tons or more		$100.00	= $ _____
○ Duct work only		$45.00	= $ _____
○ Kitchen/Bathroom exhaust fan each	_____ Quantity	$25.00	= $ _____

NOTE: New condensing units require a site plan showing the proposed proximity to the property line.
New roof-top equipment requires a site plan illustrating the location on the roof.

ELECTRIC (PREMISES WIRING)

○ Base fee		$70.00	= $70.00
○ Plus $1.10 electrical device (fixtures, receptacles, switches)	_____ Quantity	$1.10 per device	= $ _____
○ Modification to existing service equipment (circuit, sub-panel, etc.)	_____ Quantity	$60.00 each	= $ _____
○ Motors over ½ hp	_____ Quantity	$25.00 each	= $ _____
○ Temporary Electric Service (Required for new construction)	overhead	$340.00	
	underground	$680.00	= $ _____
○ Back-up generator		$175.00	= $ _____

ELECTRIC (SERVICE UPGRADE)

○ Existing electric service capacity at main panel: _____ amps

❑ New 200amp service	$9800.00	
❑ New 400amp service	$21,000.00	= $ _____
❑ New 3-phase	Cost of installation to be determined by Village Water/Electric Dept.	

Village of Winnetka
Community Development
510 Green Bay Rd.
Winnetka IL 60093

CONTRACTOR(S) OF RECORD

****IMPORTANT – Must be completed before issuance of permit****

This **completed** form may be submitted anytime during review process.

Permit Address: _____ Date: _____

Please check all boxes that apply to this Project

	Required	Not Required		Required	Not Required
General Contractor	☐	☐	Carpentry Contractor	☐	☐
Concrete Contractor	☐	☐	Demolition Contractor	☐	☐
Electrical Contractor	☐	☐	Landscape/Hardscape	☐	☐
Plumbing Contractor	☐	☐	Plumbing Contractor	☐	☐
Mechanical Contractor	☐	☐	Roofing Contractor	☐	☐
Sewer Contractor	☐	☐			

General Contractor ★$20,000 license/permit bond

Name:

Address:

City, State, Zip:

Phone: Email:

Carpenter ★$20,000 license/permit bond

Name:

Address:

City, State, Zip:

Phone: Email:

Electrician ★$20,000 license/permit bond
copy of current electric license

Name:

Address:

City, State, Zip:

Phone: Email:

Plumber ★ State 055 & 058 or Chicago J licenses
★letter of intent

Name:

Address:

City, State, Zip:

Phone: Email:

HVAC ★$20,000 license/permit bond

Name:

Address:

City, State, Zip:

Phone: Email:

Concrete ★$20,000 license/permit bond

Name:

Address:

City, State, Zip:

Phone: Email:

Village of Winnetka
Community Development
510 Green Bay Rd.
Winnetka IL 60093

Roofer ★ $20,000 license/permit bond copy of State license	
Name:	
Address:	
City, State, Zip:	
Phone:	Email:

Sewer ★$20,000 license/permit bond	
Name:	
Address:	
City, State, Zip:	
Phone:	Email:

Demolition/Excavation ★$20,000 license/permit bond	
Name:	
Address:	
City, State, Zip:	
Phone:	Email:

Water Service ★State 055 & 058	
Name:	
Address:	
City, State, Zip:	
Phone:	Email:

Irrigation ★State 060 license	
Name:	
Address:	
City, State, Zip:	
Phone:	Email:

Landscaper ★$20,000 license/permit bond	
Name:	
Address:	
City, State, Zip:	
Phone:	Email:

ZONING COMPLIANCE WORKSHEETS
LOT COVERAGE AND GROSS FLOOR AREA CALCULATIONS

Completion of these forms is required to allow Village staff to confirm compliance with zoning ordinance limitations on Intensity of Use of Lot and Gross Floor Area limitations. Any permit application which affects the total of such calculated areas must be accompanied by these forms, completed by a licensed architect or other design professional. Table 1 below indicates certain projects which may be exempt from completion of one or more sections of the attached calculations.

Calculation worksheets and the instructions for their completion are based upon the Winnetka Zoning Ordinance, Chapter 17 of the Winnetka Village Code. The zoning ordinance is available for review at the Winnetka Village Hall and at villageofwinnetka.org.

For assistance with technical zoning questions pertaining to completion of these forms, please contact the Village of Winnetka Department of Community Development at 847.716.3525 or 716.3587.

The attached forms incorporate three main components:

- **SECTION ONE:** Roofed building coverage calculations (page 4)
- **SECTION TWO:** Impermeable surface coverage calculations (page 7)
- **SECTION THREE:** Building size - Gross Floor Area calculations (page 8)

Most projects require submittal of all three sections of the attached calculation worksheets, and it should be assumed that all sections are necessary unless noted otherwise. The table below provides guidance for some types of permit work that may omit inapplicable calculation worksheets.

APPLICATIONS WHICH ARE NOT ACCOMPANIED BY THE REQUIRED CALCULATIONS OR WHICH DO NOT CONTAIN SUFFICIENT DETAIL (SEE EXAMPLE OF CALCULATION DETAIL AND DIAGRAMS ON PAGE 3 [Figures 1 and 2]) WILL BE DELAYED OR RETURNED.

TABLE 1 – ARE ZONING CALCULATIONS REQUIRED?

PROJECT TYPE	SECTION ONE Roofed Lot Coverage	SECTION TWO Impermeable Surface	SECTION THREE Gross Floor Area
New Construction	YES	YES	YES
Building Addition	YES	YES	YES
Garage (new or replacement)	YES (1)	YES	YES (2)
Interior Remodel, limited to work inside the existing building walls and roof	NO	NO	NO
Bay window or chimney addition	YES	YES	YES (3)
"Open" Porch addition	YES (4)	YES (4)	YES (5)
Screen porch or glass porch addition	YES	YES	YES
Shed, playhouse, or similar accessory building	YES	YES	YES (6)
Dormer addition to existing structure	NO	NO	YES (7)
Swimming pool or hot tub	YES	YES	NO
Wood deck	NO (8)	NO (8)	NO
Driveway, sidewalk or patio (new or replacement)	YES	YES	NO

NOTES: (1) For Pre-FAR buildings (residences built prior to February 7, 1989) and located in the R-5 or R-4 zoning districts a Roofed Lot Coverage allowance of 200 square feet is available for detached garages located in the rear 25 percent of the lot depth.

(2) Detached garages located in the rear 25 percent of the lot depth may be excluded from Gross Floor Area calculations only if they are 400 square feet in total GFA or less (including any calculable attic space). Detached garages greater than 400 square feet, or attached garages of any size must be accompanied by complete Gross Floor Area calculations.

(3) Projects limited to bay windows and/or chimneys may be excluded from detailed Gross Floor Area calculation requirements if *simplified* calculations are submitted which demonstrate that the Gross Floor Area of all bay windows and chimneys (existing and

proposed) do not exceed a total of 64 square feet. Bay window or chimney additions resulting in a total greater than 64 square feet must be accompanied by complete detailed Gross Floor Area calculations.

(4) A single-story open, but roofed porch facing a front yard or side yard may be excluded from roofed building coverage calculations only if they are less than 275 square feet in total area. Refer to Page 5 of calculation worksheets for detailed explanation. This allowance is only applicable for residences in the R-5 and R-4 zoning districts.

(5) An open porch may be included toward Gross Floor Area calculations. Refer to Step 7.B on Page 9 of calculation worksheets for detailed explanation.

(6) A shed, playhouse or similar accessory building located in the rear 25 percent of the lot depth that does not exceed 7 feet in height may be excluded from detailed Gross Floor Area calculation requirements if simplified calculations are submitted which demonstrate that the total Gross Floor Area of all such accessory buildings (existing and proposed) are less than 64 square feet in area.

(7) Certain qualifying dormers may be excluded from Gross Floor Area calculations. Refer to instructions for Step 11 on Page 16 for detailed explanation.

(8) Wood decks that are permeable (allow water to run directly into ground below) may be excluded from impermeable surface calculations.

ADDITIONAL DOCUMENTS NECESSARY TO COMPLETE THE WORKSHEETS

1. **Plat of Survey.** A significant number of project and permit delays are attributable to submittal of incomplete surveys. The plat of survey must clearly show all existing improvements on the property. REVIEW SURVEY FOR ACCURACY PRIOR TO PREPARING CALCULATIONS. Surveys must be to scale, fully dimensioned, legible and complete (photocopies are discouraged, faxes are not accepted), and must meet the following requirements:

   - The Survey shall not be more than 5 years old;
   - Lot area calculation. Any lot which is not rectangular or which has easements for ingress and egress shall have the lot area certified by the surveyor, including a detailed breakdown of square footage of total lot area and area of any easement for ingress and egress. Any such easements shall be dimensioned and described on the plat;
   - Existing topography with elevation contours at 1 foot intervals. Must show location and elevation of all existing drainage courses, swales, catch basins, paved surfaces, patios, swimming pools, etc. Topography may not be required where work is confined to the existing building footprint (Contact the Village Engineer at 847.716.3532);
   - Trees that are 8 inches or greater in trunk diameter;
   - Full exterior dimensions of all existing structures (buildings, storage sheds, garages, gazebos, fences, walls, and all similar structures) on the property;
   - Dimension distances between all structures and all property lines (setbacks);
   - All existing features must be descriptively identified. For example, porches are to be labeled as “covered” if roofed, “open” if there is no roof, or “enclosed” if screened, etc.

2. **Proposed Site Plan.** The Proposed Site Plan must clearly show all existing and proposed improvements for the property. All work must be identified and located on the site plan, including building additions, accessory buildings, impermeable surfaces, fences, walls, and other accessory structures, paving, walks, patios, etc. The Site Plan must include a scale and be fully dimensioned and contain the following information:

   - Dimension the areas of all proposed structures, additions, and/or impermeable surfaces on the property;
   - Dimension distances between all proposed structures, additions, and/or impermeable surfaces and all property lines (setbacks);
   - All proposed features must be descriptively identified. For example, porches are to be labeled as “covered” if roofed, “open” if there is no roof, or “enclosed;”
   - Clear delineation between existing and proposed site improvements.
   - Locate all trees 8 inches or greater in trunk diameter to scale from proposed changes and construction. Village Forester may require tree protection fencing prior to issuance of permit. Fences must be maintained in proper condition throughout all phases of construction. Violation will result in stop work orders and fines. (Tree removal permits are required for any tree(s) measuring 8 inches or greater.)

3. **Existing and Proposed Exterior Elevations.** The Elevations must clearly and accurately depict the existing natural grade of the land adjacent to the structure, as well as the elevation of the first floor for purposes of determining basement area inclusion in Gross Floor Area (see Step 9, page 13). In addition, elevations should clearly depict the height of each floor level and the calculable upper floor gross floor area described at Step 8 on Page 12.

CALCULATION of RLC, GFA and IMPERMEABLE SURFACES

The example below depicts the calculations required for a typical 1-story addition to an existing residence and the replacement of a driveway. Letters and numbers refer to areas created by dividing the surveyed house and impermeable surfaces into rectangles and triangles. The required graphic may be submitted on a photocopy of the survey for ease of completion, or a separately prepared graphic, provided that building dimensions reflect those shown on the survey.

FIRST FLOOR, GFA & RLC – EXISTING (Figure One)

PIECE	DIMENSIONS (FT)	RLC AREA (SF)	GFA AREA (SF)
A.	42.30 x 33.80	1,429.74	1,429.74
B.	9.50 x 5.50	52.25	~~52.25~~ (RLC Only)
C.	21.00 x 11.15	234.15	234.15
D.	9.45 x 23.05	217.82	217.82
E.	23.0 x 10.75	247.25	247.25
F.	10.10 x 12.02	121.40	~~121.40~~ (RLC Only)
	TOTALS:	2,302.61	2,128.96

FIRST FLOOR, GFA – PROPOSED (Figure One)

PIECE	DIMENSIONS (FT)	AREA (SF)
1.	14.00 x 10.00	140.00
	TOTAL:	140.00
	TOTAL EXIST and **PROPOSED:**	2,268.96

SECOND FLOOR, GFA – EXISTING (Figure One)

PIECE	DIMENSIONS (FT)	AREA (SF)
A.	42.30 x 33.80	1,429.74
C.	21.00 x 11.15	234.15
	TOTAL:	1,663.89

ATTIC, GFA – EXISTING (Figure One)

PIECE	DIMENSION (FT)	AREA (SF)
Above A. (7' height)	42.30 x 15.50	655.65
	TOTAL:	655.65

TOTAL GFA – EXISTING and PROPOSED (Figure One)

First Floor	2,268.96
Second Floor	1,663.89
Attic	655.65
TOTAL:	4,588.50

IMPERMEABLE SURFACE (Figure Two)

PIECE	DIMENSION (FT)	AREA (SF)
1.	55.50 x 9.00	499.50
2.	.5 (9.25 x 18.00)	83.25
3.	.5 (17.25 x 10.00)	86.25
4.	11.50 x 17.00	195.50
5.	5.00 x 5.00	25.00
	TOTAL:	**889.50**

*FIGURE **ONE***

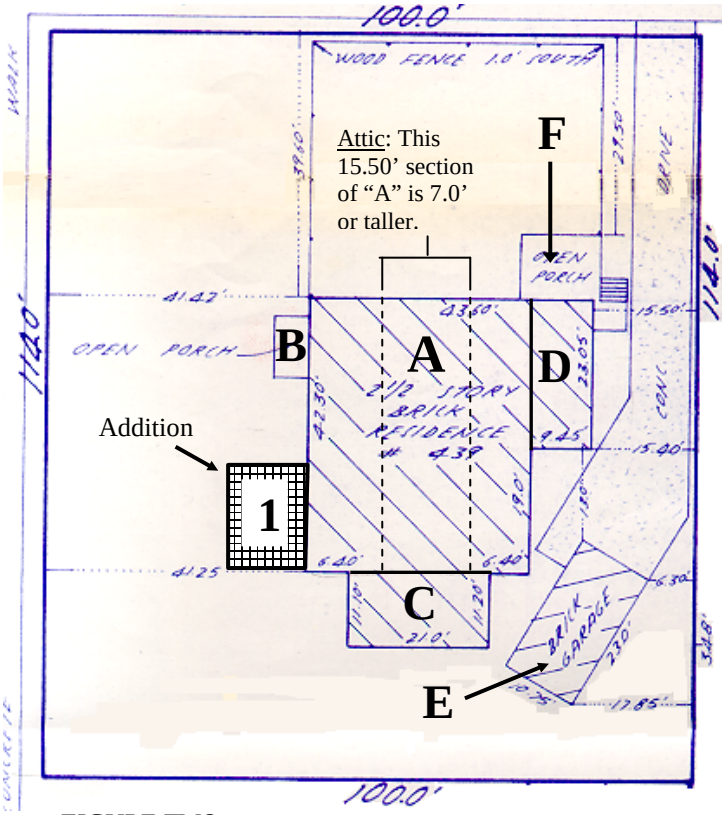

FIGURE TWO

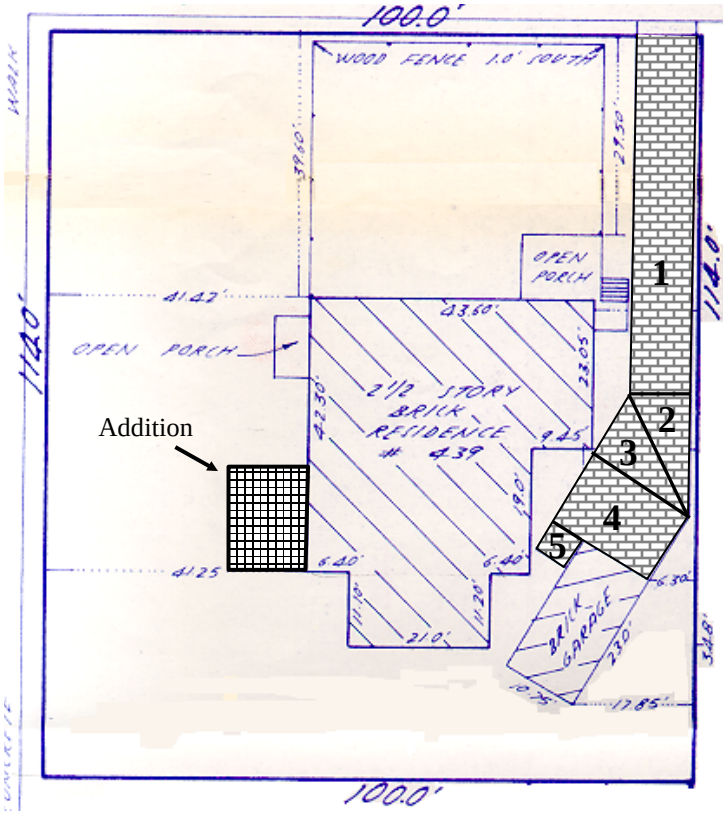

SECTION ONE - ROOFED OR BUILDING LOT COVERAGE CALCULATION WORKSHEETS

STEP 1: PROVIDE LOT AREA

(Use either Step 1.A or Step 1.B) For rectangular lots insert the lot dimensions and calculate the lot area in Step 1.A. Do not include the area within a private street easement in lot area in either Step 1.A or 1.B. If a lot is not rectangular the lot area shall be certified on the survey by the land surveyor who prepared the plat and indicated in Step 1.B.

1.A Rectangular Lots ONLY

LOT DIMENSIONS: _____ X _____ = _____ Sq. Ft. [1.A]

1.B Irregular Shape Lots - The lot area shall be provided on Plat of Survey

SURVEYOR'S CERTIFIED LOT AREA: _____ Sq. Ft [1.B]

1.C DETERMINE APPLICABILITY OF "FLAG LOT" AREA DEDUCTION

The maximum building size for flag lots shall be calculated using a modified lot area that excludes the "flagpole" portion of the lot. A flag lot is defined as "an irregularly shaped lot which consists of two sections: the primary mass of the lot which is set back from the street frontage access and is behind one or more other lots, and a narrow access corridor (the "flagpole"), which is less than 50 feet wide and extends for a distance of at least 40 feet from the primary mass of the lot toward the street, or which has street frontage less than 50 feet and extends for a distance of at least 40 feet from the street toward the primary mass of the lot." In addition, the areas within any identified ingress/egress easement (or private road easement) also need to be excluded from the gross lot area for the calculation of GFA.

Gross Lot Area: _____ Sq. Ft.
[1.A or 1.B]

Deduction for "flagpole" of flag lot: _____ Sq. Ft.

Net Lot Area: _____ Sq. Ft. [1.C]

STEP 2: DETERMINE MAXIMUM PERMITTED BUILDING/ROOFED LOT COVERAGE (RLC)

(**Use either Step 2.A or 2.B)**

2.A Post-FAR buildings (new construction) in the **R-5 and R-4 districts** and all projects in the **R-3, R-2, R-1 districts:**

LOT AREA _____ Sq. Ft. x 0.25 = _____ Sq. Ft. [2.A]
(1.A, 1.B or 1.C)

2.B Pre-FAR buildings in the **R-5 and R-4 districts (built prior to February 7, 1989) and work does not exceed the scope of "rehabilitation":**

LOT AREA _____ Sq. Ft. x 0.27 = _____ Sq. Ft. [2.B]
(1.A, 1.B or 1.C)

STEP 3: CALCULATE BUILDING/ROOFED COVERAGE

3.A CALCULATE BUILDING AREA COVERAGE TO OUTSIDE WALLS

Using the plat of survey (for existing structures) and building plans (for proposed structures), prepare calculations which detail the area and square footage occupied by all buildings (including the garage and all other accessory buildings), as well as all other roofed areas on the lot. Measurement of building area shall be from the outside of exterior walls, and shall include the area of all enclosed porches, screen porches, cantilevered upper or lower floors, bay windows, chimneys and similar building projections.

Existing Building Coverage to outside walls = _____ Sq. Ft. [3.A.1]

Proposed Additional Building Coverage to outside walls = _____ Sq. Ft. [3.A.2]

Totals summarized to left must be detailed on an attached sheet as in the example on page 3.

3.B MEASURE EAVES AND CALCUATE AREA OF EXCESSIVE EAVES IF APPLICABLE

(Use either Pre-FAR Building method <u>or</u> Post-FAR Building method)

<u>Pre-FAR Building:</u> In addition to building area measured to the outside walls of a structure, the surface area of eaves which project more than 24 inches from the exterior walls of a building must be calculated (e.g. with 30-inch eaves, the outer 6 inches shall be included in roofed lot coverage calculations).

If eaves project more than 24 inches from the exterior face of the building(s), that area greater than 24 inches is included in roofed lot coverage. Measure the maximum eave projection and calculate the area of eaves greater than 24 inches for both the existing buildings and proposed additions.

Maximum projection of <u>existing</u> eaves from exterior of house is _____ inches (not including gutters).

Maximum projection of eaves on <u>proposed</u> buildings/additions is _____ inches (not including gutters).

Area of <u>existing</u> eaves greater than 24" = _____ Sq. Ft. [3.B.1]
(If eaves are 24" or less, enter -0-)
Area of <u>proposed</u> eaves greater than 24" = _____ Sq. Ft. [3.B.2]
(If eaves are 24" or less, enter -0-)

Totals summarized to left must be detailed on an attached sheet as in the example on page 3.

<u>Post-FAR Building:</u> In addition to building area measured to the outside walls of a structure, the surface area of eaves which project more than 18 inches from the exterior walls of a building must be calculated (e.g. with 24-inch eaves, the outer 6 inches shall be included in roofed lot coverage calculations).

If eaves project more than 18 inches from the exterior face of the building(s), that area greater than 18 inches is included in roofed lot coverage. Measure the maximum eave projection and calculate the area of eaves greater than 18 inches for both the existing buildings and proposed additions.

Maximum projection of <u>existing</u> eaves from exterior of house is _____ inches (not including gutters).

Maximum projection of eaves on <u>proposed</u> buildings/additions is _____ inches (not including gutters).

Area of <u>existing</u> eaves greater than 18" = _____ Sq. Ft. [3.B.3]
(If eaves are 18" or less, enter -0-)
Area of <u>proposed</u> eaves greater than 18" = _____ Sq. Ft. [3.B.4]
(If eaves are 18" or less, enter -0-)

Totals summarized to left must be detailed on an attached sheet as in the example on page 3.

3.C CALCULATE ALL OTHER ROOFED AREAS

In addition to previously calculated building and eave areas, all other "open" roofed areas (open porches, roofed entry stoops, carports, porte-cocheres, etc.) are to be calculated.

<u>Existing</u> Other Roofed Areas = _____ Sq. Ft. [3.C.1]

<u>Proposed</u> Other Roofed Areas = _____ Sq. Ft. [3.C.2]

3.D DETERMINE APPLICABILITY OF FRONT PORCH LOT COVERAGE ALLOWANCE

IN THE R-5 AND R-4 ZONING DISTRICTS ONLY, the area of a single-story, open porch attached to the main residence and located between the residence and either the front or side lot lines may be excluded from lot coverage calculation (up to a maximum of 275 square feet). NO SCREENED OR ENCLOSED PORCHES MAY BE DEDUCTED.

Area of qualifying porch _____ Sq. Ft. [3.D] (May not exceed 275 Sq. Ft.)

3.E DETERMINE APPLICABILITY OF DETACHED GARAGE LOT COVERAGE ALLOWANCE

<u>FOR PRE-FAR BUILDINGS</u> IN THE R-5 AND R-4 ZONING DISTRICTS ONLY, 200 square feet of a detached garage located in the rear 25 percent of the lot depth may be excluded from the roofed lot coverage calculation (not transferrable to Section Two Impermeable Lot Coverage calculation).

Area of qualifying detached garage _____ Sq. Ft. [3.E] (May not exceed 200 Sq. Ft.)

3.F PROVIDE GRAPHIC DESCRIPTION OF CALCULATION OF BUILDING AREAS CALCULATED (EXAMPLE ON PAGE 3) AND SUMMARIZE ABOVE RESULTS

Transfer results from Steps 3.A through 3.E into the following summary and calculate total roofed lot coverage. Total resulting coverage must not exceed maximum calculated at Step 2.A or 2.B.

Existing Building Areas

(1) Enclosed Roofed Building Areas [from 3.A.1] _____ Sq. Ft.

(2) Excessive Eaves [from 3.B.1 or 3.B.3] + _____ Sq. Ft.

(3) Other Roofed Areas [from 3.C.1] + _____ Sq. Ft.

Subtotal, existing building area = _____ Sq. Ft.

Plus, Additional Building Areas

(1) Enclosed Roofed Building Areas [3.A.2] + _____ Sq. Ft.

(2) Excessive Eaves [from 3.B.2 or 3.B.4] + _____ Sq. Ft.

(3)Other Roofed Areas [from 3.C.2] + _____ Sq. Ft.

Less applicable front porch allowance [from 3.D] - _____ Sq. Ft. (not to exceed 275 Sq. Ft.)

Total: = _____ **Sq. Ft. [3.F]**
(May not exceed [2.A] if Post-FAR building, or if project is in R-3, R-2, or R-1 district)

Less applicable detached garage allowance [from 3.E] - _____Sq. Ft. (not to exceed 200 Sq. Ft.)

Adjusted total RLC for Pre-FAR buildings in the R-5 and R-4 districts only: = _____ *Sq. Ft. (May not exceed [2.B])*

SECTION TWO - IMPERMEABLE SURFACE LOT COVERAGE CALCULATION WORKSHEETS

Impermeable surfaces, by definition in the Zoning Ordinance, are any surface that does not allow water to drain, seep, filter or pass through into the ground below. Impermeable surfaces include, without limitation, buildings, other structures, driveways, sidewalks, walkways, patios, tennis courts, swimming pools and other similar surfaces. All impermeable surfaces are counted at 100%*.

*The only exception to this rule is a "designed permeable surface", which is a pavement system designed to allow water to pass through voids in the paving material or between pavers to a *designed subsurface storm water storage layer and underdrain system.* Such surfaces may be counted at 75% if the engineering department approves the system's compliance with the standards outlined in the ordinance. If your project includes the required subsurface storm water storage layer and underdrain system, then you must contact the engineering department at (847)716-3530 to find out if your project qualifies for this allowance.

STEP 4: DETERMINE MAXIMUM PERMITTED IMPERMEABLE LOT COVERAGE

A maximum of 50 percent of lot area may be covered by all impermeable surfaces, which includes building area calculated in *Section One*, together with other impermeable surfaces which are not buildings (driveways, patios, etc.). Of the maximum permitted (50%) impermeable lot coverage, a maximum of 25% of the lot area may be devoted to buildings and roofed areas. Thus, the maximum allowable area for additional impermeable surfaces, other than buildings and roofed areas is flexible. For example, if buildings and roofed surfaces cover 20% of the lot, up to 30% of the lot may be covered by other impermeable surfaces. These percentages are not interchangeable and the maximum allowable lot coverage devoted to buildings and roofed areas cannot exceed 25%.

In the R-5, R-4, and R-3 zoning districts a maximum of 30 percent of the required front yard may be covered with any material (impermeable surfaces, areas with roofed lot coverage, gravel or crushed stone driveways, etc.). If applicable, provide detailed representation and calculations of such areas.

4.A MAXIMUM PERMITTED IMPERMEABLE LOT COVERAGE

LOT AREA _____ Sq. Ft. x 0.50 = _____ Sq. Ft. [4.A]
[1.A, 1.B or 1.C]

STEP 5: CALCULATE IMPERMEABLE LOT COVERAGE

5.A EXISTING IMPERMEABLE LOT COVERAGE

Using the Plat of Survey, calculate the **existing** area covered by impermeable surfaces, other than buildings/roofed areas.

TOTAL EXISTING IMPERMEABLE LOT COVERAGE = _____ Sq. Ft. [5.A]

5.B PROPOSED (NEW) CONTINUOUS IMPERMEABLE COVERAGE

Using the proposed Site Plan, calculate the area of all **proposed** impermeable surfaces to be added, other than buildings/roofed areas.

Totals summarized to left must be detailed on an attached sheet as in the example on page 3.

TOTAL PROPOSED IMPERMEABLE LOT COVERAGE = _____ Sq. Ft. [5.B]

5.C TOTAL (EXISTING + PROPOSED) IMPERMEABLE and BUILDING LOT COVERAGES

Building Area (Existing and Proposed) [from 3.F] _____ Sq. Ft.

Existing Impermeable Area [from 5.A] + _____ Sq. Ft.

Proposed (New) Impermeable Area [from 5.B] + _____ Sq. Ft.

TOTAL = _____ Sq. Ft. [5.C] (May not exceed 4.A])

SECTION THREE - BUILDING SIZE (GROSS FLOOR AREA) CALCULATION WORKSHEETS

STEP 6: DETERMINE MAXIMUM PERMITTED AND TOTAL (EXISTING + PROPOSED) BUILDING SIZE

6.A DETERMINE APPROPRIATE FORMULA FOR CALCULATING MAXIMUM PERMITTED GFA:

The formula used for calculating maximum building size is based on lot area as determined above, the original date of construction of the residence, as well as the scope of work proposed.

*Any **new** residence, or alteration to an existing residence constructed after February 7, 1989, or work to a residence built before February 7, 1989 that exceeds the scope of rehabilitation (as defined below) shall be subject to the following formulas for maximum Gross Floor Area:*

Lot Area ("LA") in Square Feet	Formula for Maximum GFA
1) Up to and including 9,075	0.38 x LA
2) Over 9,075, to and including 12,000	3,630 + [(LA - 9,075) x 0.2] – (0.02 x LA)
3) Over 12,000 to and including 16,000	3,630 + [(LA - 9,075) x 0.2] – (0.02 x LA) + ({[(LA-12,000)/1,000] x 0.005} x LA)
4) Over 16,000 to and including 22,000	3,630 + [(LA - 9,075) x 0.2] + ({[(LA-16,000)/1,000] x 0.005} x LA)
5) Over 22,000	3,630 + [(LA – 9,075) x 0.2] + (0.03 x LA)

Maximum building size/GFA calculator available on the Village of Winnetka website at villageofwinnetka.org

For a residence built prior to February 7, 1989, and for which work does not exceed the scope of "rehabilitation", the following formulas are used for determining maximum Gross Floor Area:

Lot Area ("LA") In Square Feet	Formula for Maximum GFA
6) Up to and including 9,075	0.40 x LA
7) Over 9,075, to and including 16,000	3,630 + [(LA - 9,075) x 0.2]
8) Over 16,000 to and including 22,000	3,630 + [(LA - 9,075) x 0.2] + ({[(LA-16,000)/1,000] x 0.005} x LA)
9) Over 22,000	3,630 + [(LA – 9,075) x 0.2] + (0.03 x LA)

***Rehabilitation**: The act or process of making possible the efficient contemporary use of a building through repair, alterations or additions, while preserving those portions or features that convey its historical or architectural values and while maintaining the character of the property, its neighborhood and environment.*

6.B DETERMINE MAXIMUM PERMITTED GROSS FLOOR AREA

MAXIMUM PERMITTED BUILDING SIZE (GFA). Using the Lot Area [1.A, 1.B or 1.C] and the appropriate formula from 6.A (or the GFA calculator on the Village website), calculate the maximum permitted GFA below:

Maximum Permitted GFA = _____ Square Feet [6.B]

(Formula Used [#1-#9]) _____ (above)

STEP 7: CALCULATE BUILDING GROSS FLOOR AREA

7.A CALCULATE BUILDING AREA WITHIN EXTERIOR WALLS (for each full story)

Similar to the building/roofed area calculations performed in Step 3, prepare calculations that detail the area of each story of all buildings on the lot contained within the exterior walls of all buildings. Using the plat of survey (for existing structures) and building plans (proposed structures) prepare calculations which detail the dimensions and square footage area occupied by all buildings. The use of exact dimensions allows review staff to identify and quickly verify areas calculated - for this reason do not "round" dimensions up or down.

Prepare a graphic representation of areas calculated (see example on page 3), and enter dimensions and areas in tables as applicable for each story in Step 7.C (first floor) and Step 7.D (second floor).

- Measurement of Gross Floor Area shall be from the outside of exterior walls, and shall include the area of all screened and enclosed porches, bay windows, chimneys and similar building projections.

- No deductions shall be taken for hallways, stairs, closets, unfinished areas, thickness of walls, etc. Screened or enclosed porches shall be included regardless of whether the screens or other enclosure are permanently affixed.

- For purposes of calculating floor area of multi-story structures, the definition of "story" and the principles and rules associated with it shall apply as follows (attic/half-story areas and basement areas are to be calculated in Steps 8 and 9):

  Story: That portion of a building included between the surface of any floor and the surface of the floor next above it or, in the case of an upper floor, between the surface of the upper floor and the bottom of the roof deck, provided that the floor area of the upper floor exceeds the floor area for a half-story. For purposes of this definition, the following principles shall apply:

  a) The floor of a story may split levels, provided that there is not more than four feet difference in elevation between the different levels.
  b) Any balcony, mezzanine, partial floor or open-beamed ceiling that does not extend horizontally to fill the perimeter of the building shall be deemed to be a full floor or ceiling at that level.
  c) Any area of a building in which the distance from one floor to the floor or roof rafters above it is more than 14 feet, and which is uninterrupted by a balcony, mezzanine, partial floor or open-beamed ceiling, shall be deemed to consist of one story for each 14 feet of height or fraction thereof.
  d) A basement that has an average height above grade of more than 4 feet, measured to the bottom of the beams of the floor above, shall be deemed to be a full story.

7.B DETERMINE APPLICABILITY OF <u>OTHER</u> CALCULABLE GROSS FLOOR AREA

In addition to areas enclosed by walls or screens, other areas of a building shall be included in the calculation of Gross Floor Area as follows:

(a) the area of a building or structure that have exterior walls that extend more than 3½ feet above the floor on two or more sides (such as parapet walls, open porches with knee walls, etc);
(b) the area of any open porch, if located on the first floor of a building and has a ceiling formed by the floor of a porch or any other portion of the building above it;
(c) the area of each floor level below a roofed porch or other cantilevered structural feature located above the first floor level of a multi-story building or structure;
(d) the area of each floor below a roof that is supported by columns and is located above the first floor level of a multi-story building or structure.

Include any areas calculated as provided herein on graphic calculations as well as in the following tables.

7.C TABULATE <u>FIRST FLOOR</u> GROSS FLOOR AREA

<u>EXISTING</u> FIRST FLOOR AREA (This section does not apply to new construction)

Section	Description	Dimensions	Area (Square Feet)
A.			
B.			
C.			
D.			
E.			
F.			
G.			
H.			
I.			
J.			
K.			
L.			
M.			
N.			
		EXISTING FIRST FLOOR TOTAL AREA:	Square Feet

<u>PROPOSED</u> FIRST FLOOR AREA

Section	Description	Dimensions	Area (Square Feet)
1.			
2.			
3.			
4.			
5.			
6.			
7.			
8.			
9.			
10.			
11.			
12.			
13.			
14.			
		PROPOSED FIRST FLOOR TOTAL AREA:	Square Feet

TOTAL <u>EXISTING AND PROPOSED</u> FIRST FLOOR AREA: _____ Sq. Ft [7.C]

7.D TABULATE SECOND FLOOR GROSS FLOOR AREA

Refer to instructions at Section 7.A and 7.B. Include all chimney areas at second floor level when attached to a two-story structure.

EXISTING SECOND FLOOR AREA (This section does not apply to new construction)

Section	Description	Dimensions	Area (Square Feet)
A.			
B.			
C.			
D.			
E.			
F.			
G.			
H.			
I.			
J.			
K.			
L.			
M.			
N.			
	EXISTING SECOND FLOOR TOTAL AREA:		Square Feet

PROPOSED SECOND FLOOR AREA

Section	Description	Dimensions	Area (Square Feet)
1.			
2.			
3.			
4.			
5.			
6.			
7.			
8.			
9.			
10.			
11.			
12.			
13.			
14.			
	PROPOSED SECOND FLOOR TOTAL AREA:		Square Feet

TOTAL EXISTING AND PROPOSED SECOND FLOOR AREA: _____ Sq. Ft [7.D]

STEP 8: CALCULATE TOTAL (EXISTING + PROPOSED) UPPER FLOOR AREA

Effective May 21, 2002, the area calculation for upper floor areas (attics and half-story areas) is a measurement of areas 7 feet tall, measured from *either* the actual attic floor level or a standardized uniform height above the first floor level, *whichever is lower*. The standardized uniform attic floor height varies by zoning district and is indicated in Table 2 below. Attic floor heights may be built at heights greater than the standardized height established for that zoning district, but the calculation of upper floor gross floor area will use the lower standardized point of reference. Accordingly, the amount of attic space that contributes toward the total gross floor area calculation will vary based on proposed ceiling heights on the first and second floor, as depicted in the graphic example below.

TABLE 2 – STANDARDIZED UPPER FLOOR HEIGHTS (see accompanying diagram below)	
ZONING DISTRICT	HEIGHT ABOVE FIRST FLOOR
R-5	20 FT. (depicted below)
R-4	20 FT. (depicted below)
R-3	21 FT.
R-2 (Lot area less than 48,000 sq. ft.)	21 FT.
R-2 (Lot area 48,000 sq. ft. or greater)	23 FT.
R-1	23 FT.

The graphic below illustrates the differing calculation of attic space for a R-5 or R-4 zoned residence, based on a "standard" attic floor height of 20 feet (left example, with 9-foot ceilings at first and second floor) and a raised attic floor height of 22 feet (right example, with 10-foot ceilings).

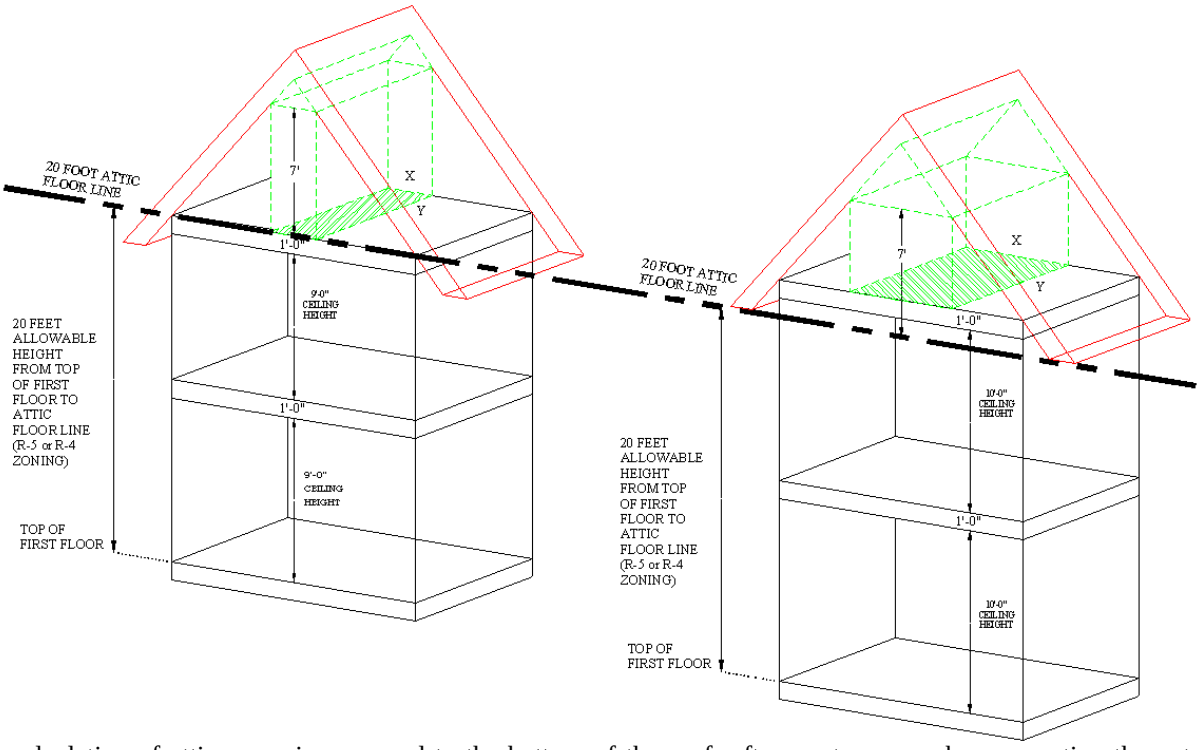

The calculation of attic space is measured to the bottom of the roof rafters or truss member supporting the outer roof structure. In instances where roof rafters exceed 12 inches in depth, attic calculations are subject to use of a standardized 12" thickness for the point of measurement.

Attic area calculated in Step 8 is subject to an "allowance" or deduction for calculable attic/half-story space, ranging from a minimum of 150 square feet, up to a maximum of 3 percent of the lot area, taken at Step 11.C on Page 16.

All "upper floors" shall be measured for the presence of areas 7 feet in height, including accessory buildings, and shall be identified on graphic calculations as well as in tables below.

Include any areas calculated as provided herein on graphic calculations as well as in the following tables.

IMPORTANT NOTE: Calculations of upper floor attic and half-story areas are also used to verify compliance with the 2½-story height limit. Clear representation of all 7 foot areas on graphic calculations is critical to assuring timely review and approval of plans.

EXISTING UPPER FLOOR AREA (This section does not apply to new construction)

Section	Description	Dimensions	Area (Square Feet)
A.			
B.			
C.			
D.			
E.			
F.			
G.			
H.			
I.			
	EXISTING UPPER FLOOR TOTAL AREA:		Square Feet

PROPOSED UPPER/ATTIC FLOOR AREA

Section	Description	Dimensions	Area (Square Feet)
1.			
2.			
3.			
4.			
5.			
6.			
7.			
8.			
9.			
	PROPOSED UPPER FLOOR TOTAL AREA:		Square Feet

TOTAL <u>EXISTING AND PROPOSED</u> UPPER/ATTIC FLOOR AREA: _____ Sq. Ft. [8.A]

<u>STEP 9</u>: DETERMINE THE TOTAL (EXISTING + PROPOSED) BASEMENT FLOOR AREA

A basement that is wholly below grade will not be included in Gross Floor Area. When a basement is exposed above the adjacent grade more than a defined vertical distance (see below), a portion of the basement may be included in Gross Floor Area, dependent on the proportion of the basement so exposed.

For a basement built <u>on or after February 7, 1989</u>, the portion of basement walls exposed more than <u>2.5 feet</u> above grade shall be included in Gross Floor Area. The proportion of basement area to be included shall be determined by calculating the proportion of basement exposed more than 2.5 feet, <u>measured from existing natural grade to the top of the finished first floor</u>, and including that proportional amount of basement floor area below. See example calculation on the following page for clarification of basement measurement methodology.

For a basement built <u>before February 7, 1989</u>, the portion of basement walls exposed more than <u>4.0 feet</u> above grade shall be included in Gross Floor Area. The proportion of basement area to be included shall be determined by calculating the proportion of basement walls exposed more than 4.0 feet, <u>measured from existing natural grade to the bottom of the first floor joist</u>, and including that proportional amount of basement floor area below.

9.A DETERMINE EXISTING AND PROPOSED EXPOSED PERIMETER OF BASEMENT

For residences constructed after February 7, 1989, the exposed perimeter is the total linear feet of basement walls that are exposed by 2.5 feet or more above existing natural grade.

TOTAL EXPOSED PERIMITER = _____ Ft. [9.A]

OR

For residences constructed on or before February 7, 1989, the exposed perimeter is the total linear feet of basement walls that are exposed by 4.0 feet or more above existing natural grade.

TOTAL EXPOSED PERIMETER = _____ Ft. [9.A]

If no basement wall is exposed more than the above-prescribed amounts, and the plans clearly and accurately verify such measurements, enter -0- above and skip to Step 10.

9.B DETERMINE FLOOR AREA OF BASEMENT (EXISTING + PROPOSED). Calculate the total floor area of the basement. All measurements are to be calculated using the existing and/or proposed exterior walls of the home.

TOTAL FLOOR AREA OF BASEMENT =_____ Sq. Ft. [9.B]

9.C DETERMINE BASEMENT AREA TO BE COUNTED IN GFA

$$\text{TOTAL FLOOR AREA OF BASEMENT [9.B]} \times \frac{\text{EXPOSED BASEMENT PERIMETER [9.A]}}{\text{TOTAL PERIMETER OF BASEMENT}}$$

BASEMENT AREA TO BE COUNTED IN GFA = _____ Sq. Ft. [9.C]

SKETCH ILLUSTRATING METHODOLOGY FOR DETERMINING BASEMENT GROSS FLOOR AREA

The extent of basement area included in Gross Floor Area calculations is based on the proportion of basement that is exposed above existing natural grade by more than the prescribed amount, measured from *existing natural grade* to *top of the finished first floor level for "Post-FAR" buildings and to the bottom of the first floor joist for "Pre-FAR" buildings*.

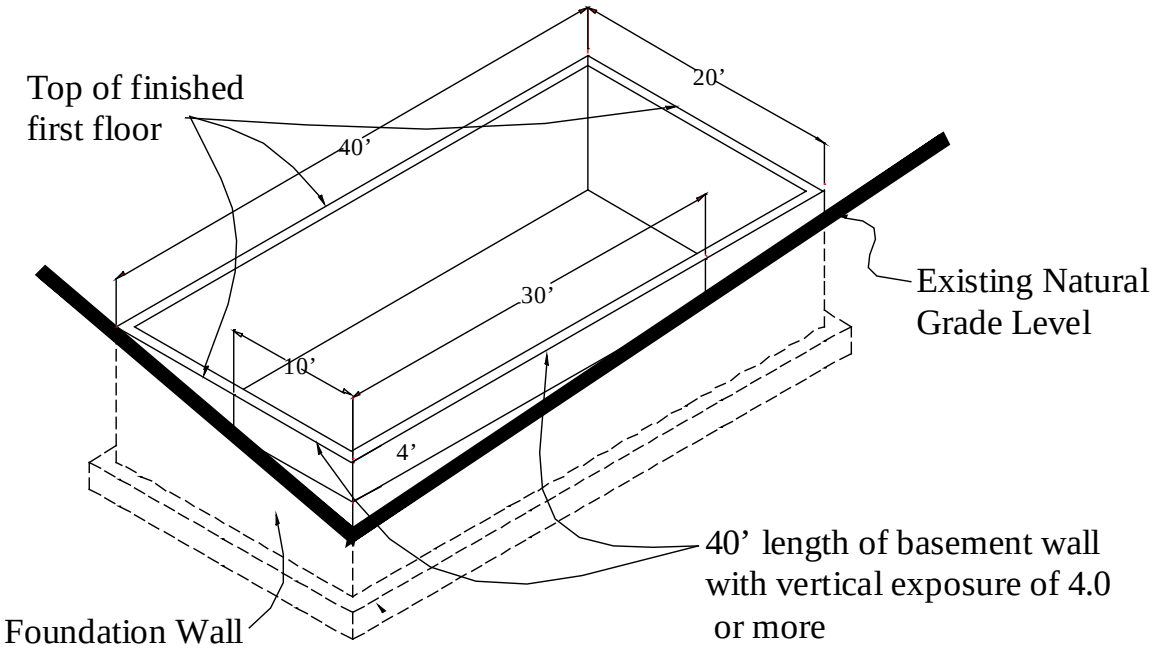

DETERMINE TOTAL (EXISTING + PROPOSED) BASEMENT FLOOR AREA

9.A	Total exposed perimeter:	10’ + 30’ = 40’
9.B	Floor area of basement:	20’ x 40’ = 800 sq. ft.
9.C	Area of basement counting toward GFA:	800 x (40/120) = 266.67 sq. ft.

STEP 10: DETERMINE TOTAL GROSS FLOOR AREA (GFA)

Transfer the total of the results (total EXISTING AND PROPOSED floor area) found in STEPS 7, 8 & 9.

FIRST FLOOR EXISTING AND PROPOSED GFA _____ Sq. Ft.
[from 7.C]

SECOND FLOOR EXISTING AND PROPOSED GFA + _____ Sq. Ft.
[from 7.D]

UPPER/ATTIC FLOOR EXISTING AND PROPOSED GFA + _____ Sq. Ft.
[from 8.A]

BASEMENT FLOOR EXISTING AND PROPOSED GFA + _____ Sq. Ft.
[from 9.C]

TOTAL EXISTING AND PROPOSED GROSS FLOOR AREA = _____ Sq. Ft. [10.A]

STEP 11: DETERMINE ALLOWANCES FOR GROSS FLOOR AREA (ONLY complete sections that apply)

Exclusions from permitted GFA. The following floor areas shall be excluded from the maximum building size:

1. An amount of garage floor area equal to one of the following:
   (a) The first 400 square feet of the floor area of a one-story detached garage located in the rear quarter of the lot; or
   (b) The first 200 square feet of the floor area of an attached garage located in the rear of a house, provided that no part of the garage forms any part of the front building line or the building line exposed to a corner lot line;
2. Up to 150 square feet or the equivalent of 3 percent of the lot area, whichever is greater, of the floor area of an attic or half-story;
3. Up to 64 square feet of the aggregate floor area of all bay windows and chimneys that form a part of the exterior building line;
4. The floor area under any dormer that is no more than 6 feet wide and is set in at least 3½ feet from the gable end walls, provided that the total width of all dormers does not exceed 25% of the length of the roof on which they area located;
5. The first 64 square feet of the aggregate floor area of a detached storage shed, playhouse, walled enclosures for refuse containers or swimming pool equipment, or similar enclosed structures, provided they are located in the rear quarter of the lot.

11.A **DETACHED GARAGE**: This allowance is ONLY applicable to a one-story detached garage located within the rear 25% of the **maximum depth** of the lot. The garage area allowance may be equal to the detached garage floor area above, however, this allowance may not be greater than the actual detached garage area, or 400 square feet, whichever is less.

Detached Garage Floor Area Allowance = _____ Sq. Ft. [11.A.]

OR

11.B **ATTACHED GARAGE**: This allowance is ONLY applicable to an attached garage that is in the rear of a house. The attached garage allowance may be equal to the attached garage floor area, however, this allowance may not be greater than the actual attached garage area, or 200 square feet, whichever is less.

Attached Garage Floor Area Allowance = _____ Sq. Ft. [11.B.]

Note: An allowance may be taken for either a detached garage or attached garage, but not both.

11.C ATTIC FLOOR AREA: This allowance is ONLY applicable to attic and half-story areas calculated in Step 8. No allowance may be taken for an upper floor that exceeds a half-story.

The attic allowance is 3% of the lot area or 150 square feet, whichever is greater, but this allowance may not be greater than the Total Attic Gross Floor Area. The allowance may not be greater than the actual calculated attic area [Step 8.A]

Total Attic Floor Area = _____ Sq. Ft.
[from 8.A]

Lot Area _____ sq. ft. x 0.03 = _____ Sq. Ft.
[from Step 1.A, 1.B,or 1.C]

Attic Floor Area Allowance = _____ Sq. Ft. [11.C]

11.D CHIMNEY AND BAY WINDOWS: This allowance is ONLY applicable to the total Gross Floor Area of all chimneys and bay windows that project beyond the exterior of a building wall. Each floor level of a chimney and/or bay window is included in the calculation. This allowance may not exceed the actual calculated area of all bay windows and chimneys or 64 square feet, whichever is less.

Total Chimney/Bay Window Area Allowance = _____ Sq. Ft. [11.D]

11.E DORMERS: This allowance is ONLY applicable to the floor area under a dormer that is no more than 6 feet wide and set in at least 3.5 feet from the gable end wall, provided that the total width of all dormers does not exceed 25% of the length of the roof on which they are located. This allowance may not exceed the actual calculated area of all dormers.

Total Dormer Area Allowance = _____ Sq. Ft. [11.E]

11.F SHED, PLAYHOUSE, and SIMILAR ACCESSORY STRUCTURE: The first 64 square feet of the aggregate floor area of a detached storage shed, playhouse, walled enclosure for refuse containers or swimming pool equipment, or similar enclosed structures are excluded from the calculation of GFA, provided that they are located in the rear quarter of the lot.

Total Shed, etc. Area Allowance = _____ Sq. Ft. [11.F]

11.G DETERMINE TOTAL ALLOWANCE FOR GROSS FLOOR AREA

Total Allowance = _____ Sq. Ft. [11.G]
[from 11. A. or 11.B. + 11.C. + 11.D + 11E. + 11F.]

STEP 12: SUMMARY OF GROSS FLOOR AREA (GFA) DETERMINATIONS

12.A TOTAL EXISTING AND PROPOSED GFA: _____ Sq. Ft.
[from 10.A]

12.B Subtract TOTAL ALLOWANCE FOR GFA: _____ Sq. Ft.
[from 11.G]

12.C FINAL PROPOSED GFA: _____ Sq. Ft. [12.C]
[12.A-12.B]

6.B FINAL PERMITTED GFA: _____ Sq. Ft. [6.B]

NOTE: The FINAL PROPOSED GFA [12.C] may not exceed the MAXIMUM PERMITTED GFA [6.B]

PREPARED BY: (Print or Type) **Place Design Professional SEAL below:**

Name: _____

Company Name: _____

Full Address: _____

_____

Phone: _____Fax: _____

Email: _____ Date: _____ Signature: _____